ENGINEERING DRAWING

For Beginners

Md. Roknuzzaman

Department of Civil Engineering, HSTU, Dinajpur

E-mail : mrz.civil@hstu.ac.bd

Hajee Mohammad Danesh Science and Technology University

Dinajpur, Bangladesh

Preface

Engineering Drawing is one of the basic courses to study for all engineering disciplines. The primary problem faced in learning and teaching of engineering drawing is the limited availability of text books that focus on the basic rules and specifications in relation to the drawing methods practiced in Bangladesh. This handbook is prepared with the primary aim to elaborate necessary basic rules and regulations of engineering drawing that is necessary for students of every engineering discipline. This book is for beginners to introduce them with different elements of engineering drawing. Several worked-out examples are provided along with every chapter and also every chapter includes some exercise and assignments to be practiced by the learners. The course *Engineering Drawing* is extremely important as it is the language of engineers, technicians, designers and sanitarians. This handbook is devoted to provide general aspects of engineering drawing like lettering, geometric constructions, dimensioning, scaling, orthographic and isometric projections and sectioning. The handbook is prepared taking aid from a number of textbooks and articles mentioned in bibliography section. Most of the figures are drawn using AutoCAD, a few of them are collected from Google image search and some are taken from the textbooks. For further reading, students are encouraged to refer books which are listed in the bibliography section.

Acknowledgement

The author is delighted to express his thanks and gratitude to Prof. Md. Ruhul Amin, the honorable Vice-chancellor and chairman of the Department of Civil Engineering, HSTU, without his initiative and inspiration this material would not come into reality. Author is also grateful to his colleagues of the Department of Civil Engineering and of the Department of Agricultural and Industrial Engineering for inspiring him in completing this handbook. And obviously it is the mercy of the Almighty Allah that the material has finally come into a complete form.

CONTENTS

Page No.

Preface…… i
Acknowledgement…… i
Contents…… ii

CHAPTER 1 INTRODUCTION

1.1 Drawing…… 1
1.2 Types of Drawing…… 1
1.2.1 Artistic Drawing…… 1
1.2.2 Engineering Drawing…… 1
1.3 Purpose of Engineering drawing…… 1
1.4 Applications of Engineering Drawing…… 2
1.5 Types of Engineering Drawing…… 2
1.5.1 Geometric Drawing…… 2
1.5.2 Mechanical Engineering Drawing…… 2
1.5.3 Civil Engineering Drawing…… 2
1.5.4 Electrical Engineering Drawing…… 2
1.6 Specific Purposes of Studying Civil Engineering Drawing…… 2
1.7 Types of Civil Engineering drawing…… 3
1.8 Elements of Engineering Drawing…… 3
1.9 Drawing Standards…… 3
1.10 Drawing Instruments…… 3
Review Questions…… 9

CHAPTER 2 LINES AND SYMBOLS

Objectives…… 10
2.1 Conventional Lines…… 10
2.2 Conventional Symbols…… 12
2.2.1 Common Geometric Symbols Used in Engineering Drawing…… 12
2.2.2 Common Symbols Used in Civil Engineering Drawing… 13
2.2.3 Common Symbols Used in Electrical Engineering Drawing…… 15
Exercise and Assignments…… 16
Review Questions…… 16

CHAPTER 3 LETTERING AND NUMBERING

Objectives…… 17
3.1 Letter Styles…… 17
3.2 Classification of Letters…… 17
3.2.1 Extended and Condensed Letters…… 17
3.2.2 Light Face and Bold Face Letters…… 18
3.3 Technique of Lettering…… 18
3.4 Guide Lines…… 18
3.4.1 Guidelines for Capital Letters…… 18
3.4.2 Guidelines for Lower-Case Letters…… 18
3.5 Single Stroke lettering…… 18
3.6 Order of Strokes…… 18
3.7 Spacing of Letters…… 22
3.8 Lettering in Maps…… 22
3.9 Summary of ISO Rules for Lettering…… 22
Exercise and Assignments…… 24
Review Questions…… 24

CHAPTER 4 GEOMETRIC CONSTRUCTION

Objectives…… 25
4.1 Introduction…… 25
4.2 Geometric Nomenclature…… 25
4.2.1 Points in Space…… 25
4.2.2 Lines…… 25
4.2.3 Angle…… 25
4.2.4 Triangles…… 26
4.2.5 Quadrilateral…… 26
4.2.6 Polygon…… 26
4.2.7 Circle…… 27
` 4.2.8 Solids…… 27
4.3 Techniques of Geometric Constructions…… 27
4.3.1 How to Bisect a Line or an Arc…… 28
4.3.2 How to Divide a Line into a Number of Equal Parts…… 28
4.3.3 How to Bisect an Angle…… 29
4.3.4 How to Draw an Arc or Circle (Radius) through Three Given Points…… 29
4.3.5 How to Transfer an Odd Shape (Triangular)…… 30
4.3.6 How to Transfer Complex Shapes…… 30
4.3.7 How to Draw a Pentagon (5 Sides)…… 31
4.3.8 How to Draw a Hexagon (6 Sides)…… 31
4.3.9 How to Draw an Octagon (8 Sides)…… 31
4.3.10 How to Draw any Sided Regular Polygon…… 32
4.3.11 How to Locate the Center of a Given Circle…… 33
4.3.12 How to Draw Arc Tangent to a Straight Line and a Curve…… 34
4.3.13 How to Draw Arc Tangent to Two Arcs of Different Radius…… 34
4.3.14 How To Draw an Ogee Curve…… 35
4.3.15 How to Draw Straight Tangent to Two Arcs of Different Radius…… 36
4.3.16 How to Draw an Ellipse (Four-centered Approximate Method)…… 36
Exercise and Assignments…… 37
Review Questions…… 37

CHAPTER 5 DIMENSIONING

Objectives…… 38
5.1 Purpose of Dimensioning…… 38
5.2 General Conditions for Dimensioning…… 38
5.3 Elements of Dimension System…… 38
5.4 Rules for Dimensioning…… 38
5.4.1 General Rules for Dimensioning…… 38
5.4.2 Rules of Extension Lines…… 39
5.4.3 Rules of Dimension Lines…… 39
5.4.4 Rules of Arrowhead…… 39
5.4.5 Rules of Leaders…… 40
5.5 Direction of Dimensions…… 40
5.6 Technique of Dimensioning…… 41
5.7 Dimensioning in Limited Space…… 41
5.8 Dimensioning of Angles…… 42
5.9 Dimensioning of Arcs…… 43
5.10 Dimensioning of Chord length, Arc length and Angle…… 43
5.11 Dimensioning of Round Holes…… 44
5.12 Dimensioning of Blind Holes…… 44

5.13 Dimensioning of Chamfer…… 44
5.14 Common Mistakes in Dimensioning…….…….. 45
5.15 Worked-out Examples of Dimensioning……..... 48
Exercise and Assignments…….. 51
Review Questions…… 53

CHAPTER 6 SCALES

Objectives…….. 54
6.1 Scale…… 54
6.2 Uses of scale…… 54
6.3 Sizes of Scales…… 54
6.4 Classification of Scales……..... 55
6.4.1 Plain Scale…… 55
6.4.2 Diagonal Scale……. 55
6.4.3 Comparative Scale…….. 55
6.4.4 Vernier Scale…….. 55
6.4.5 Chord Scale…… 55
6.5 Necessity of Construction of Scale on Drawing…… 55
6.6 Information Necessary for Construction of a Scale…… 56
6.6.1 The Representative Fraction (R.F.)…… 56
6.6.1.1 Worked out Examples of R.F. calculation……... 56
6.6.2 Units of Measurement…….. 57
6.7 Construction of Plain Scale…… 57
6.7.1 Worked-out Examples of Plain Scale Construction…… 58
6.8 Principle of Diagonal Scales……... 61
6.9 Construction of Diagonal Scales…….…… 62
6.9.1 Worked-out Examples of Diagonal Scale Construction... 63
Exercise and Assignments…….. 70
Review Questions…… 71

CHAPTER 7 PROJECTION

Objectives…….. 72
7.1 Introduction…… 72
7.1.1 Projection…… 72
7.1.2 Picture Plane/Plane of Projection…… 72
7.1.3 View…… 72
7.1.4 Projector…… 72
7.2 Types of projection…….. 73
7.2.1 Orthographic Projection…….. 73
7.2.2 Pictorial Projection……. 74
7.2.2.1 Axonometric Projection…….. 74
7.2.2.2 Oblique Projection…….. 74
7.2.3 Perspective Projection……..…….. 75
7.3 Details of Orthographic Projection…… 75
7.3.1 The Glass Box method…… 75
7.3.2 The Six Principal Views……. 77
7.3.3 Arrangement of Views…….. 78
7.3.3.1 Glass Box Concept for 1st Angle Projection…..… 79
7.3.3.2 Glass Box Concept for 3rd Angle Projection…..... 80
7.3.4 Orthographic Projections of Parallel, Inclined and Oblique Surfaces…….. 81
7.3.5 Orthographic Projections of Hidden Surfaces…… 82
7.3.6 Orthographic Projections of Curved Surfaces and Holes 82
7.3.7 Precedence of Lines……..…… 82
7.3.8 Method of Obtaining Views…… 83
7.3.9 Methods of projecting views…… 84

7.3.10 Spacing between the Views……..…… 84
7.3.11 Steps for Projecting Views by Diagonal Line Method.. 85
7.3.12 Worked-out Examples of Orthographic Views…… 87
7.3.13 Limitation of Multi View Projection…..……. 91
7.4 Details of Isometric Projection…… 91
7.4.1 Principle of Isometric Projection…….. 91
7.4.2 Isometric Scale…… 92
7.4.3 Lines in Isometric Projection……... 93
7.4.4 Isometric Drawing……... 93
7.4.5 Method of Constructing Isometric Drawing…… 94
7.4.5.1 Box Method…… 94
7.4.5.2 Off-set Method……... 94
7.4.6 Isometric Drawing of Planes……..... 95
7.4.6.1 Isometric Drawing of Rectangular Plane……... 95
7.4.6.2 Isometric Drawing of Pentagonal Plane…… 95
7.4.6.3 Isometric Drawing of a Circular Plane……. 96
7.4.7 Isometric Drawing of Solids……... 96
7.4.7.1 Points to be Remembered for Isometric drawing... 96
7.4.8 Steps for drawing Isometric View……... 96
7.4.9 Worked-out Examples of Isometric Drawing…… 99
Exercise and Assignments…….. 102
Review Questions…… 109

CHAPTER 8 SECTIONING

8.1 Introduction…… 110
8.2 Terminology…… 110
8.2.1 Sectioning…… 110
8.2.2 Sectional View…… 110
8.2.3 Cutting Plane……. 111
8.2.4 Cutting Plane Line……..... 111
8.2.5 Section Lining…… 112
8.3 Types of section……... 112
8.3.1 Full Section……... 113
8.3.2 Offset Section……... 113
8.3.3 Half Section……. 114
8.3.4 Broken-out Section……. 114
8.3.5 Revolved Section……. 115
8.3.6 Removed Section…… 117
8.4 Special Consideration for Section of Ribs, Spokes and Lugs…….. 118
8.5 Parts that Should Not Be Sectioned……... 119
8.6 Worked-out Examples of Sectioning……... 120
Exercise and Assignments…….. 123
Review Questions…….. 125

Bibliography …… 126

CHAPTER 1
INTRODUCTION

1.1 Drawing

The graphical representation of any object or idea can be termed as drawing. A drawing can be prepared either using free hand or using engineering instruments or using computer program.

1.2 Types of Drawing

1. Artistic Drawing
2. Engineering Drawing

1.2.1 Artistic Drawing

The drawing representing any object or idea which is sketched in free hand using imagination of artist and in which proper scaling and dimensioning is not maintained is called an artistic drawing. Example: Painting, Posters, arts etc.

1.2.2 Engineering Drawing

Engineering drawing can be defined as a graphical language used by engineers and other technical personnel associated with the engineering profession which fully and clearly defines the requirements for engineered items. It is a two dimensional representation of a three dimensional object.

In other words, The art of representing a real or imaginary object precisely using some graphics, symbols, letters and numbers with the help of engineering drawing instruments is called engineering drawing.

The art of representing engineering objects such as buildings, roads, machines, circuits etc. on a paper is called engineering drawing.

It is used by engineers and technologists. An engineering drawing provides all information about size, shape, surface type, materials etc. of the object. Example: Building drawing for civil engineers, Machine drawing for mechanical engineers, Circuit diagrams for electrical and electronics engineers, computer graphics for one and all etc.

Table 1.1 Difference Between Artistic and Engineering Drawing

Artistic Drawing	Engineering Drawing
Purpose of artistic drawing is to convey emotion or artistic sensitivity in some way.	Purpose of engineering drawing is to convey information about engineering object or idea.
Can be understood by all.	Need some specific knowledge or training to understand.
Scale maintaining is not necessary	Scale maintaining is necessary
No special requirement of engineering instruments.	Engineering drawing instruments is used to make the drawing precise.
An artistic drawing may not be numerically specific and informative.	An engineering drawing must be numerically specific and informative.
Standard drawing code need not to be followed.	Standard drawing code (like ISO, ANSI, JIS, BS etc,) must be maintained.

1.3 Purpose of Engineering drawing

It is very difficult and complex to explain some certain engineering requirements in word. In such cases well dimensioned and properly scaled graphics can make it easy to understand that for technical personnel. Engineering drawing serves this purpose. Any product that is to be manufactured, fabricated, assembled, constructed, built, or subjected to any other types of conversion process must first be designed. To make the outcome from the design understandable to any third party engineering drawing is the best way.

1.4 Applications of Engineering Drawing

Engineering drawing is an essential part of almost all engineering projects. Some important uses of engineering drawing are mentioned below:

1. It is used in ships for navigation.
2. For manufacturing of machines, automobiles etc.
3. For construction of buildings, roads, bridges, dams, electrical and telecommunication structures etc.
4. For manufacturing of electric appliances like TV, phone, computers etc.

1.5 Types of Engineering Drawing

Engineering drawing can be grouped into following 4 major categories:

1. Geometrical Drawing
    a. Plane geometrical drawing
    b. Solid geometrical drawing
2. Mechanical Engineering Drawing
3. Civil Engineering Drawing
4. Electrical & Electronics Engineering drawing etc.

1.5.1 Geometric Drawing

The art of representing geometric objects such as rectangles, squares, cubes, cones, cylinders, spheres etc. on a paper is called geometric drawing. If the object has only 2 dimensions i.e. length and breadth (as rectangles, squares, triangles etc.), it is called Plane geometrical drawing and if it has 3 dimensions i.e. length, breadth and thickness/depth (as cube, prism, sphere, cylinder etc.), it is called Solid geometrical drawing.

1.5.2 Mechanical Engineering Drawing

The art of representing mechanical engineering objects such as machines, machine parts etc. on a paper are called mechanical engineering drawing or machine drawing. It is used by mechanical engineers to express mechanical engineering works and projects for actual execution.

1.5.3 Civil Engineering Drawing

The art of representing civil engineering objects such as buildings, roads, bridges, dams etc. on a paper are called civil engineering drawing. It is used by civil engineers to express civil engineering works and projects for actual execution.

1.5.4 Electrical Engineering Drawing

The art of representing electrical engineering objects such as motors, generators, transformers, wiring diagrams etc. on a paper are called electrical engineering drawing. It is used by electrical engineers to express electrical engineering works and projects for actual execution.

The art of representing electronic circuits of TV, Phones, computers etc. on a paper are called electronic engineering drawing or electronic drawing. It is used by electronic engineers to express electronic engineering works and projects for actual execution.

1.6 Specific Purposes of Studying Civil Engineering Drawing

One needs to study civil engineering drawing for the following purposes:

1. To develop the ability to produce simple civil engineering drawing and sketches based on current practice.
2. To develop the skills to read and understand the drawings used in civil engineering projects.
3. To develop a working knowledge of the layout of buildings, bridges, highways etc. and other civil engineering structures.
4. To develop skills in abstracting information from calculation sheets and schematic diagrams to produce working drawings for masons, construction managers and field workers who execute civil engineering projects.

1.7 Types of Civil Engineering drawing

Civil engineering drawing of a civil work project can be classified in two broad categories:

1. **Architectural Drawing**
   a. Plan:
      It shows the position of different objects and elements of the structure in a two dimensional view. Only length and width of objects are shown here.
   b. Elevation and Section:
      It shows a view along the height of structure. Elevation can be presented in 2D or 3D. In 2D elevation view either height and length or height and width is showed.
2. **Structural Drawing**
   It shows the detail requirement of reinforcement and their arrangement in structure. It also shows the specification and properties of construction materials like concrete, steel, timber etc.

1.8 Elements of Engineering Drawing

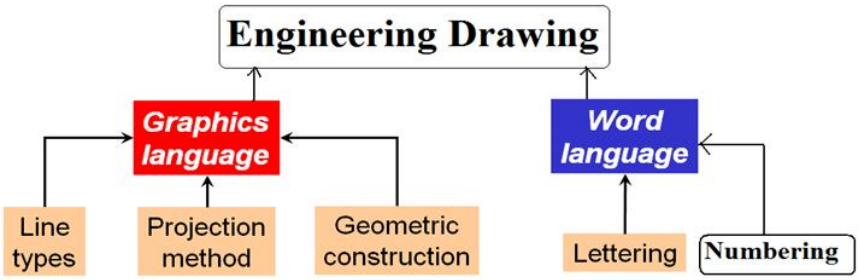

Fig. 1.1 Elements of Engineering Drawing

1.9 Drawing Standards

An engineering drawing should be well specified and universally acceptable. That's why there are some specified rules for engineering drawing. These rules may vary slightly for different regions. There are some drawing standards or drawing codes that accumulates the rules of engineering drawing for a certain region. Well-known drawing codes and their application region is expressed below:

Table 1.2 Drawing Standards

Country/Region	Code/Standard	Full Meaning
Worldwide	**ISO**	International Organization for Standardization
USA JAPAN	ANSI JIS	American National Standards Institute Japanese Industrial Standards
UK	BS	British Standards

In Bangladesh in most of the cases, it is usual practice to follow ISO code for engineering drawing. However, in some instances ANSI and BS standards are also followed.

1.10 Drawing Instruments

The most common instruments used for engineering drawing are:

1. Drawing Board
2. Drawing paper
3. Pencil
4. Rubber/Eraser
5. T- square
6. Set-square
7. Instrument box
8. Protractor
9. Compass
10. Scales
11. Pins and clips
12. Adhesive tapes
13. French curves etc

Drawing Board

- It is a board or platform rectangular in shape.
- Size of drawing board need to be larger than that of drawing paper.
- It is made of wood.
- Top surface should be smooth.

Drawing Paper

Drawing paper is the paper, on which drawing is to be made. All engineering drawings are made on sheets of paper of strictly defined sizes, which are set forth in the respective standards. The use of standard size saves paper and ensures convenient storage of drawings.

Desirable properties a good drawing paper:

- It should be smooth and uniform in thickness.
- It should be thick, strong and tough.
- Fibers of drawing paper should not be disintegrated when a good eraser is used on it.

Paper Types:

1. Detail Paper (used for pencil work).
2. White drawing paper (used for finished drawing)
3. Tracing paper (used for both pencil and ink work and useful for replicating a master copy)

Paper Size:

Table 1.3 ISO Paper Sizes (plus rounded inch values)

Format	A series		B series		C series	
Size	**mm × mm**	**in × in**	**mm × mm**	**in × in**	**mm × mm**	**in × in**
0	841 × 1189	33.1 × 46.8	1000 × 1414	39.4 × 55.7	917 × 1297	36.1 × 51.1
1	594 × 841	23.4 × 33.1	707 × 1000	27.8 × 39.4	648 × 917	25.5 × 36.1
2	420 × 594	16.5 × 23.4	500 × 707	19.7 × 27.8	458 × 648	18.0 × 25.5
3	297 × 420	11.7 × 16.5	353 × 500	13.9 × 19.7	324 × 458	12.8 × 18.0
4	210 × 297	8.27 × 11.7	250 × 353	9.84 × 13.9	229 × 324	9.02 × 12.8
5	148 × 210	5.83 × 8.27	176 × 250	6.93 × 9.84	162 × 229	6.38 × 9.02
6	105 × 148	4.13 × 5.83	125 × 176	4.92 × 6.93	114 × 162	4.49 × 6.38
7	74 × 105	2.91 × 4.13	88 × 125	3.46 × 4.92	81 × 114	3.19 × 4.49
8	52 × 74	2.05 × 2.91	62 × 88	2.44 × 3.46	57 × 81	2.24 × 3.19
9	37 × 52	1.46 × 2.05	44 × 62	1.73 × 2.44	40 × 57	1.57 × 2.24
10	26 × 37	1.02 × 1.46	31 × 44	1.22 × 1.73	28 × 40	1.10 × 1.57

The tolerances specified in the standard are

- ±1.5 mm (0.06 in) for dimensions up to 150 mm (5.9 in),
- ±2 mm (0.08 in) for lengths in the range 150 to 600 mm (5.9 to 23.6 in) and
- ±3 mm (0.12 in) for any dimension above 600 mm (23.6 in).

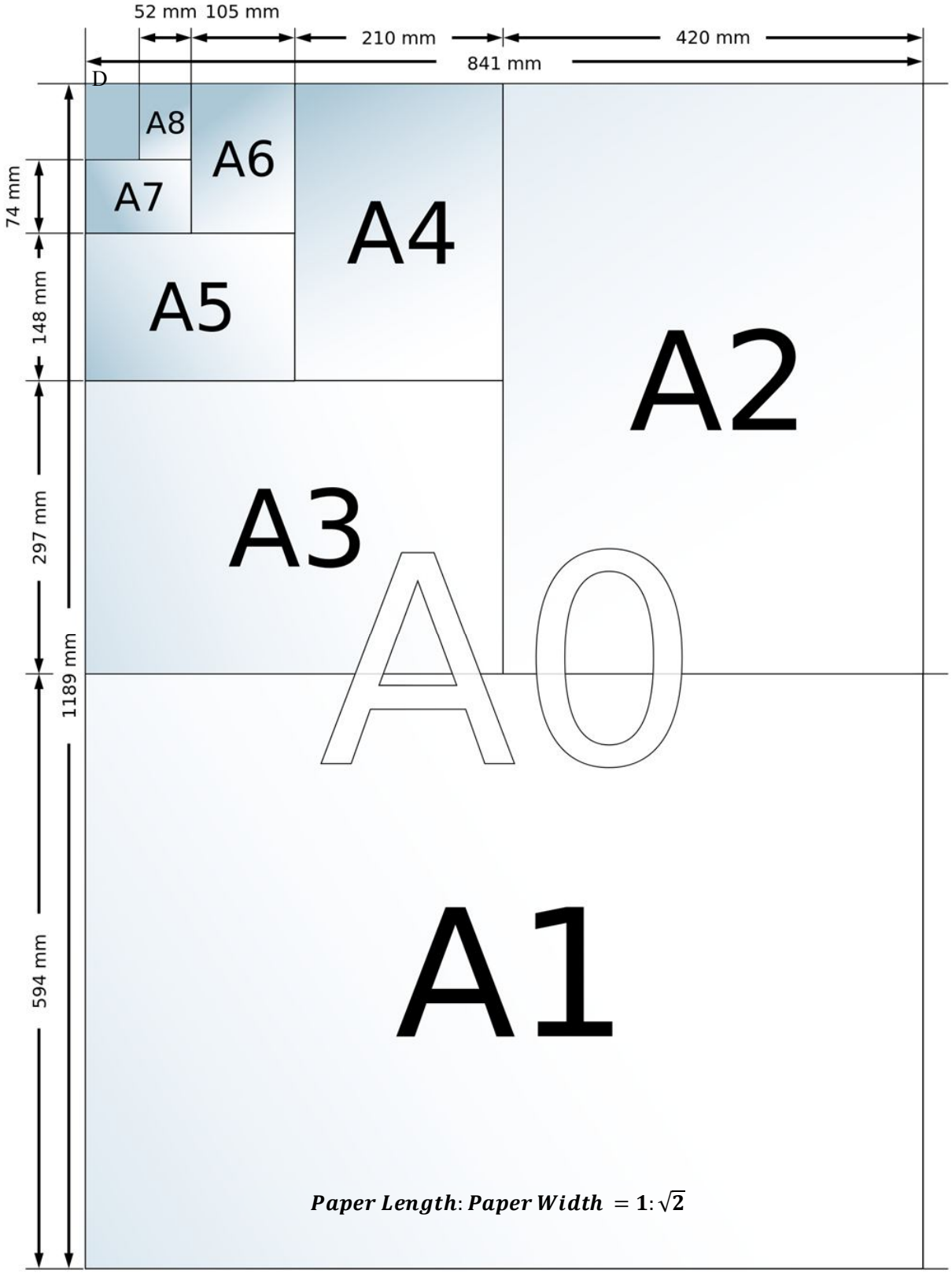

Fig. 1.2 Standard Sizes of Drawing Paper

Paper Layout:

The ISO standard (ISO 5457) require a 20mm border to the left hand edge (for filing) and a 10mm border round the other three sides of the drawing sheet. However, the margin of paper can be increased according to requirements and settings of printer/plotter.

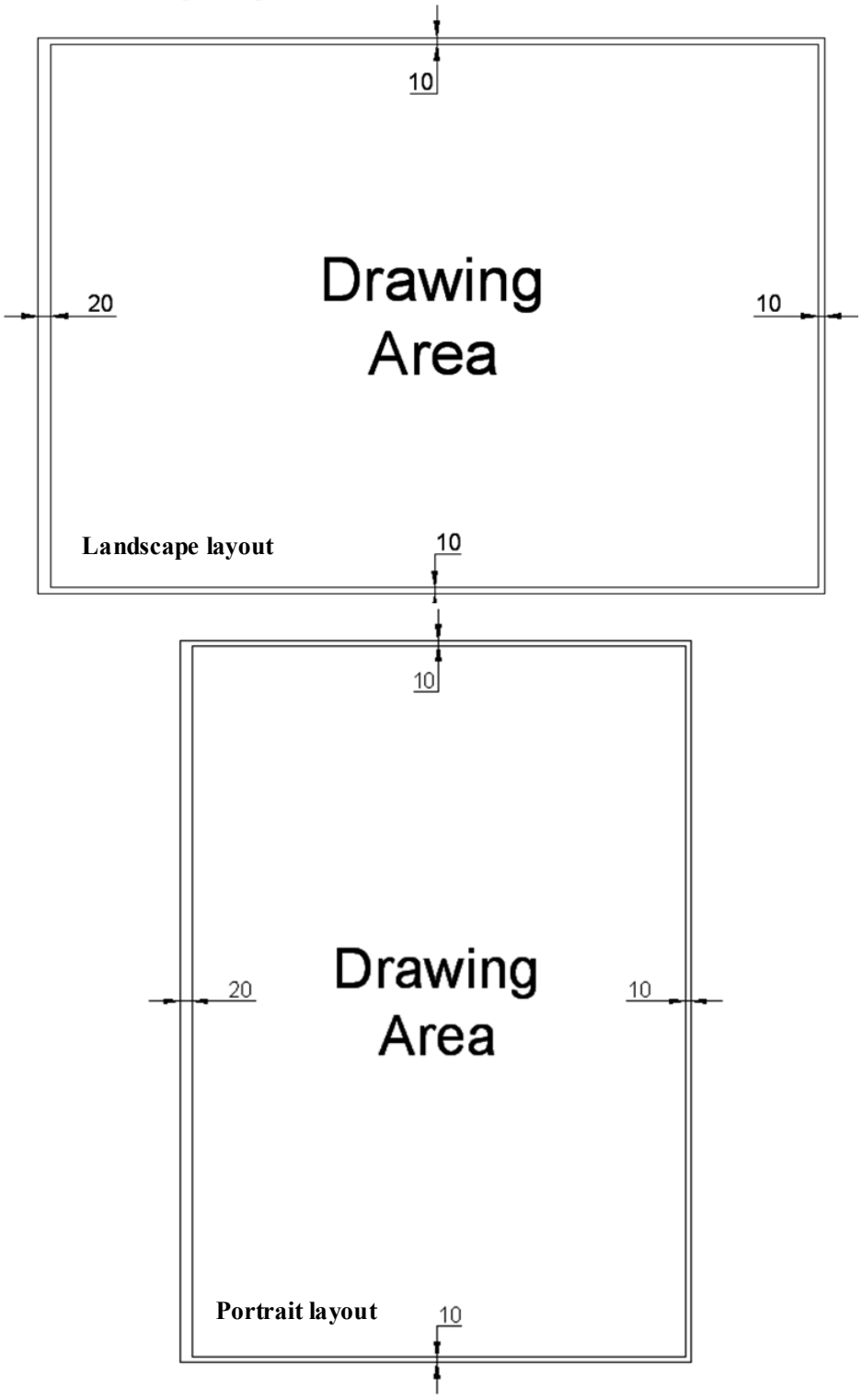

Fig. 1.3 Landscape and Portrait Layout of Drawing Paper

For Class Work:

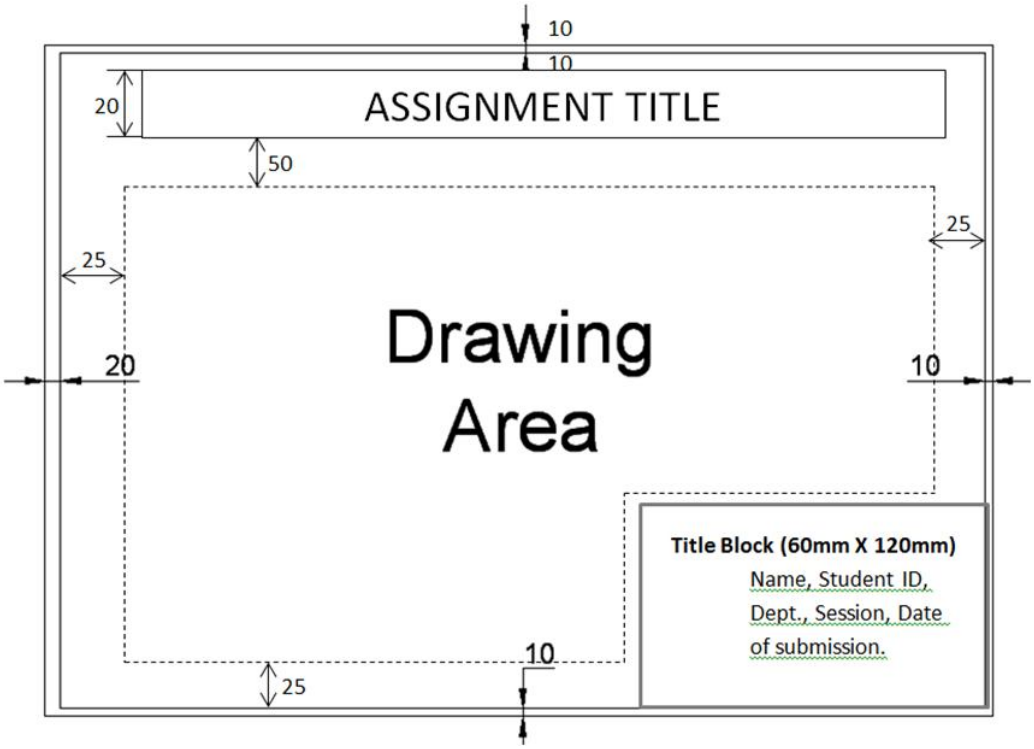

Fig. 1.4 Paper Layout for Class Assignments

Pencil:

Pencils are used to draw different lines, shapes, symbols and to write texts in engineering drawing. Based on the hardness of lead pencils are classified in three major grades as hard, medium and soft. They are further sub-divided and numbered as mentioned in table below:

Table 1.4 Pencils of Different Grades

Grade	Items arranged ordering harder to softer
Hard	9H> 8H> 7H>6H>5H>4H
Medium	3H>**2H**>H>F>**HB**>B
Soft	2B>3B>4B>5B>6B>7B

Selection of proper grade pencil or lead is important for quality drawing. One has to be careful in selecting a lead because very hard lead might penetrate the drawing, on the other hand, soft lead may smear. Quality and type of drawing paper is an important factor in selecting lead. One other importance consideration is the importance of line to be drawn. Inferior lines (like border lines, guide lines, construction lines and any other auxiliary lines needed to be erased later) are drawn using harder pencil. Comparatively softer grade pencil is used for drawing superior items (like object line, texts, symbols etc.).
Common uses of different grade pencil are tabulated below:

Table 1.5 Pencil Usage Guideline for Different Line Types

Task	Lead	Task	Lead		Task	Lead
Border Lines	3H, 2H	Centerlines	2H,H		Leaders	2H, H
Construction Lines	3H, 2H	Phantom Lines	2H,H		Hidden Lines	2H, H
Guide Lines	3H, 2H	Long Break Lines	2H, H		Cross Hatching Lines	2H,H
Lettering	H, F, HB	Visible Lines	H, F, HB		Extension Lines	2H, H
Dimension Lines	2H, H	Cutting Plane Lines	H, F, HB		Short Break lines	H, F, HB

For convenience we will use 2H and HB pencils for our assignments and class drawings.

T-square:

1. Used to draw horizontal straight line.
2. Used to guide the triangles when drawing vertical and inclined lines.

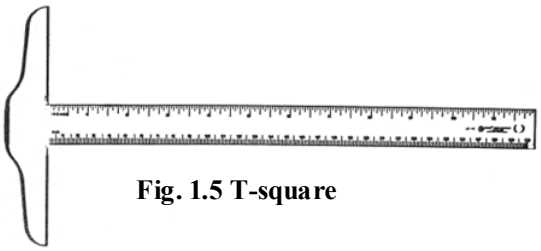

Fig. 1.5 T-square

Set-square:

1. Used to construct the most common angles (i.e. 30^0, 45^0 and 60^0) in technical drawings.
2. Used to draw parallel and perpendicular lines quickly and conveniently.

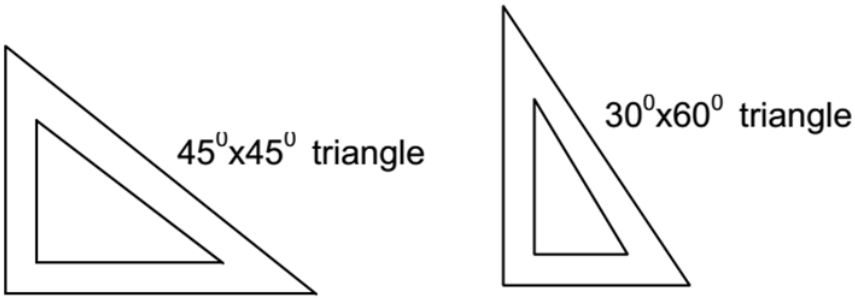

Fig. 1.6 Set-square

Protractor:

It is used for laying out and measuring angle.

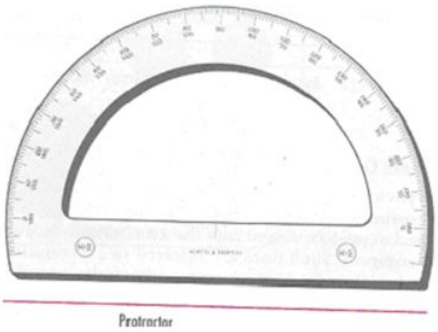

Fig. 1.7 Protractor

Scale (ruler):

A number of kinds of scales are available for varied types of engineering design. Scales with beveled edges graduated in mm are usually used.

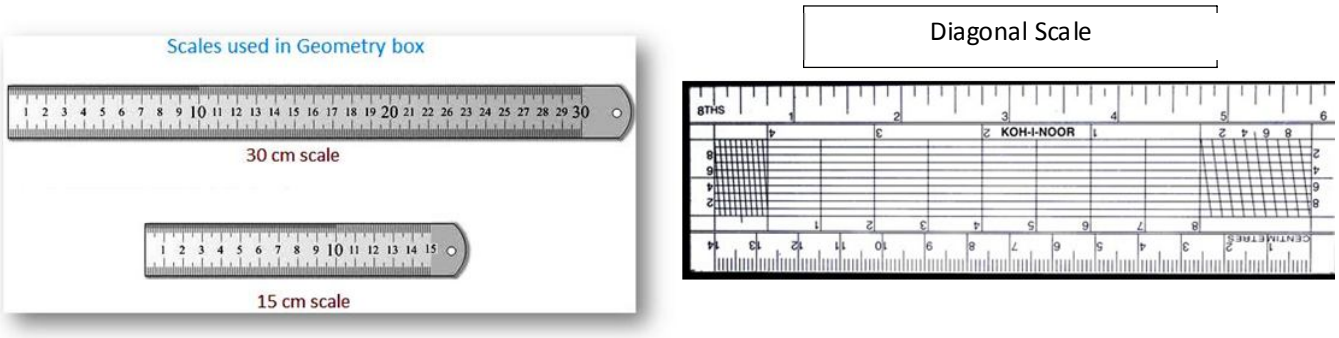

Fig. 1.8 Scales

Compass

It is used to draw circles and arcs both in pencil and ink. It consists of two legs pivoted at the top. One leg is equipped with a steel needle attached with a screw, and other shorter leg is, provided with a socket for detachable inserts.

Dividers:

Used chiefly for transferring distances and occasionally for dividing spaces into equal parts. i.e. for dividing curved and straight lines into any number of equal parts, and for transferring measurements.

Fig. 1.9 Compass and Divider

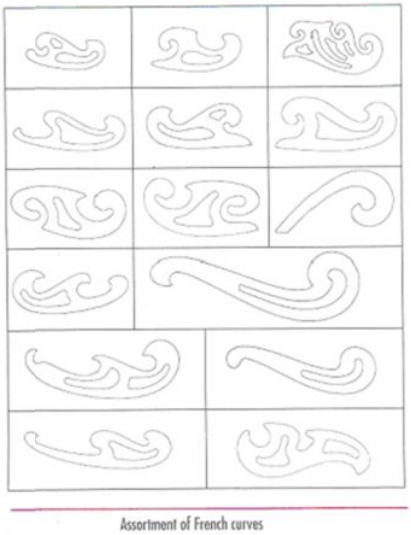

Fig. 1.10 French Curves

French curve:

It is used to draw irregular curves that are not circle arcs. The shape varies according to the shape of irregular curve.

Review Questions

1. Define drawing and classify it.
2. What are the differences between engineering drawing and artistic drawing?
3. Why Engineering drawing is called the language of engineers?
4. What are specific applications of engineering drawing for your discipline?
5. Classify engineering drawing and give example of each branch.
6. Classify civil engineering drawing.
7. What is difference between plan, elevation and section?
8. Name some codes/standards of engineering drawing. Which one is used in Bangladesh/USA/UK?
9. Name some common drawing instruments and their uses.
10. What is the standard size of a drawing board?
11. What is the standard proportion of drawing paper's length and width?
12. What is the measurement of an A0/A1/A2/A3/A4 paper?
13. What is the difference between white drawing paper and tracing paper?
14. How pencils are classified?
15. On what considerations you will choose pencil for a drawing?
16. Which pencil should be used for drawing object boundary/guideline/dimension line/border line/texts.
17. How paper quality affects choice of pencil?
18. Which angles can be drawn directly with set-squares?

CHAPTER 2
LINES AND SYMBOLS

Objectives

Objective of studying this chapter are:

- To learn to explain the different line types
- To learn to mention the application of each line type in technical drawings
- To learn to mention the application of different symbols.

2.1 Conventional Lines

Each line on a technical drawing has a definite meaning and is drawn in certain ways. There are certain conventional lines recommended by drawing codes. Usually two types of widths are used for the lines; they are thick and thin. Thick lines are in between 0.5 mm to 0.8 mm wide while the thin lines are between 0.3 mm to 0.5 mm wide. However, the exact thickness may vary according to the size and type of drawing. If the size of drawing is larger, the width of the line becomes higher. There should also be a distinct contrast in the thickness of different kinds of lines, particularly between the thick lines and thin lines. Visible, cutting plane and short break lines are thick lines, on the other hand hidden, center, extension, dimension, leader, section, phantom and long break lines are thin.

Table 2.1 Conventional Lines and Their Usage

SL No.	Name of line type	Line appearance	Usage
01	Visible line/ Object line	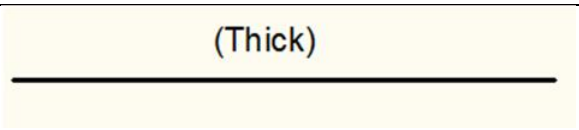	To indicate all visible outlines/boundary of an object. It shows the shape of an object
02	Hidden line/ Dashed line	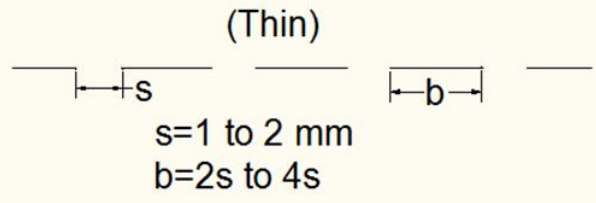	To represent hidden edge of an object. They should end on both sides by touching the visible lines and should touch themselves at intersection (if any).
03	Center line	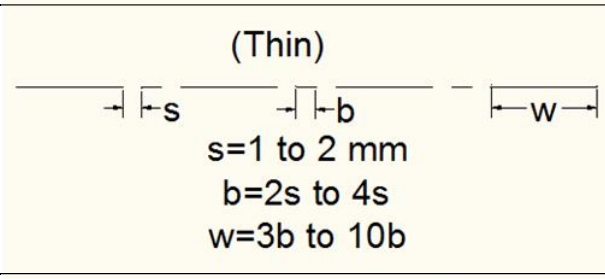	To show a line passing through center of hole, pitch line etc.
04	Extension line, Dimension line and leaders	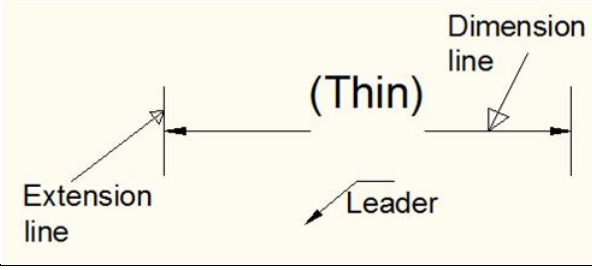	To show dimension of an object

Cont.

Table 2.1 Conventional Lines and Their Usage (Contd.)

SL No.	Name of line type	Line appearance	Usage
05	Section line	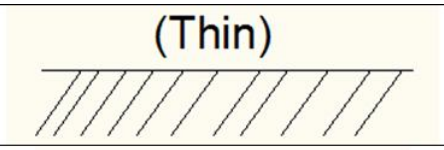	To indicate cut portion of an object
06	Cutting plane line	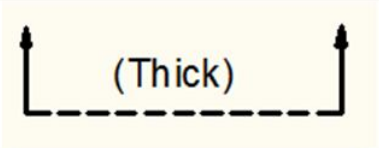	To show imaginary cutting of an object.
07	ISO cutting planeline	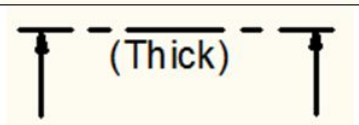	
08	Break lines	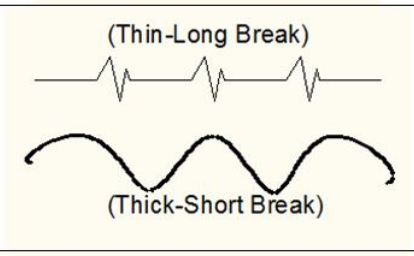	To show break of an object in order to shorten the view of a long part.
09	Phantom line/ Repeat line	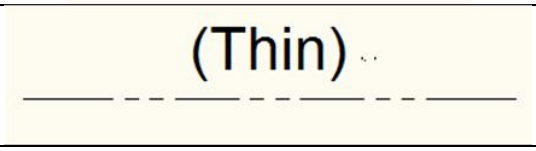	To show alternate position of an object or the position of an adjacent part.

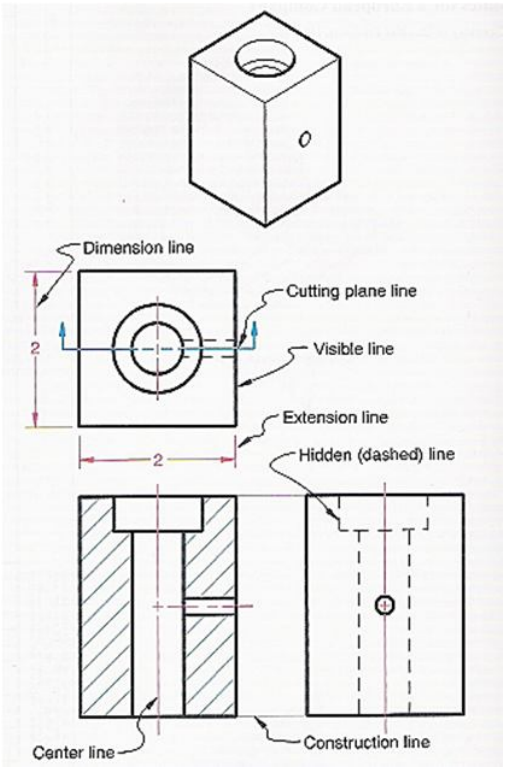

Fig. 2.1 Use of Different Types of Lines

2.2 Conventional Symbols

A variety of symbols are used in engineering drawing to represent different elements, properties, material types etc. Some geometric symbols are commonly used in almost every types of drawing while there are some special symbols used in specific types (civil, mechanical, electrical etc.) of drawing.

2.2.1 Common Geometric Symbols used in Engineering Drawing

Table 2.2 Conventional Geometric Symbols

SYMBOL FOR :	ANSI Y14.5	SYMBOL FOR :	ANSI Y14.5
STRAIGHTNESS	—	DIAMETER	Ø
FLATNESS	⏥	BASIC DIMENSION	50
CIRCULARITY †	○	REFERENCE DIMENSION	(50)
CYLINDRICITY †	⌭	DATUM FEATURE	-A-
PROFILE OF A LINE	⌒	DATUM TARGET	60
PROFILE OF A SURFACE	⌓	TARGET POINT	×
ALL AROUND-PROFILE	⌭	DIMENSION ORIGIN	⌖
ANGULARITY	∠	CONICAL TAPER	▷
PERPENDICULARITY	⊥	SLOPE	◺
PARALLELISM	//	COUNTERBORE/SPOTFACE	⌴
POSITION	⌖	COUNTERSINK	⌵
CONCENTRICITY/COAXIALITY †	◎	DEPTH/DEEP	↧
SYMMETRY ‡	NONE	SQUARE (SHAPE)	□
CIRCULAR RUNOUT	↗	DIMENSION NOT TO SCALE	15
TOTAL RUNOUT	⌰	NUMBER OF TIMES/PLACES	8X
AT MAXIMUM MATERIAL CONDITION	Ⓜ	ARC LENGTH	105
AT LEAST MATERIAL CONDITION	Ⓛ	RADIUS	R
REGARDLESS OF FEATURE SIZE	Ⓢ	SPHERICAL RADIUS	SR
PROJECTED TOLERANCE ZONE	Ⓟ	SPHERICAL DIAMETER	SØ

* MAY BE FILLED IN

† Not recommended, use runout
‡ Not used

2.2.2 Common Symbols used in Civil Engineering Drawing

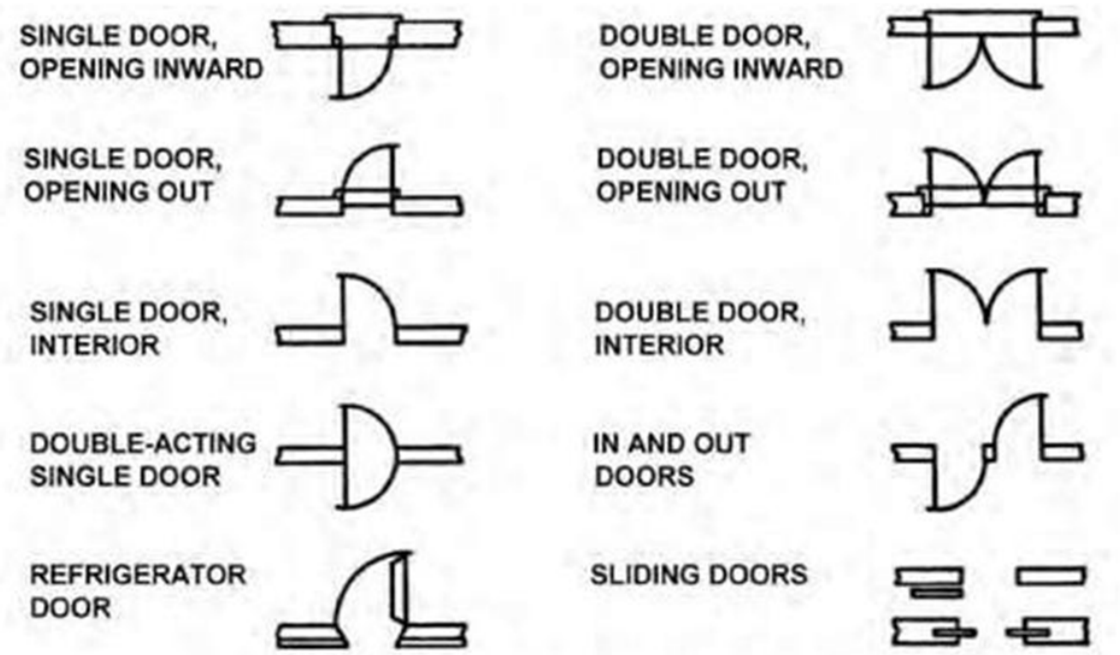

Fig. 2.2 Typical Door Types

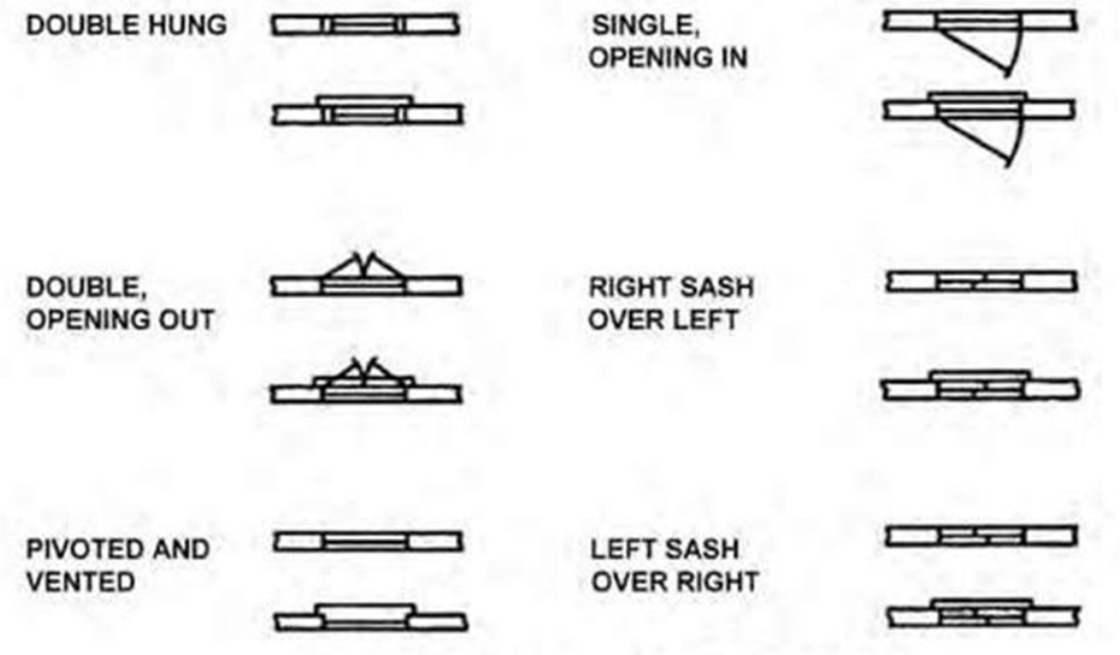

Fig. 2.3 Typical Window Types

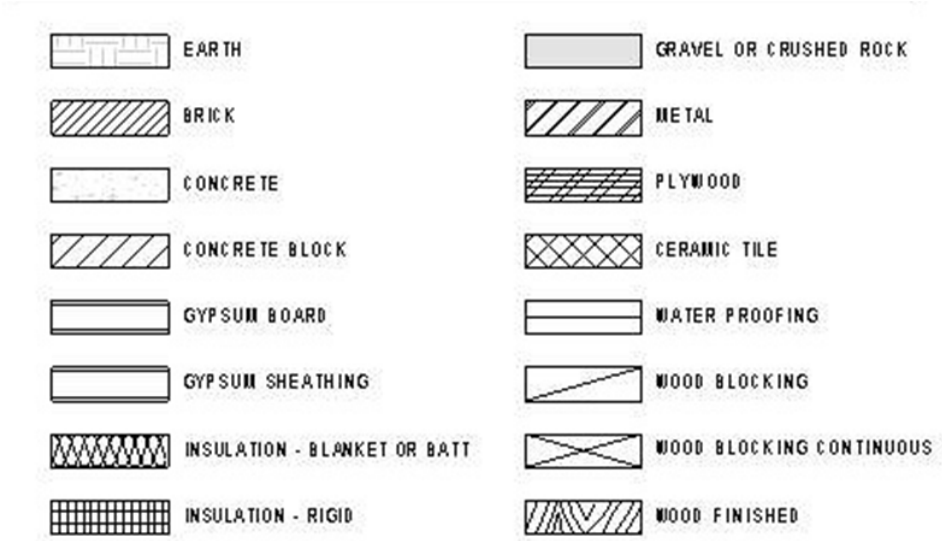

Fig. 2.4 Symbols for Materials

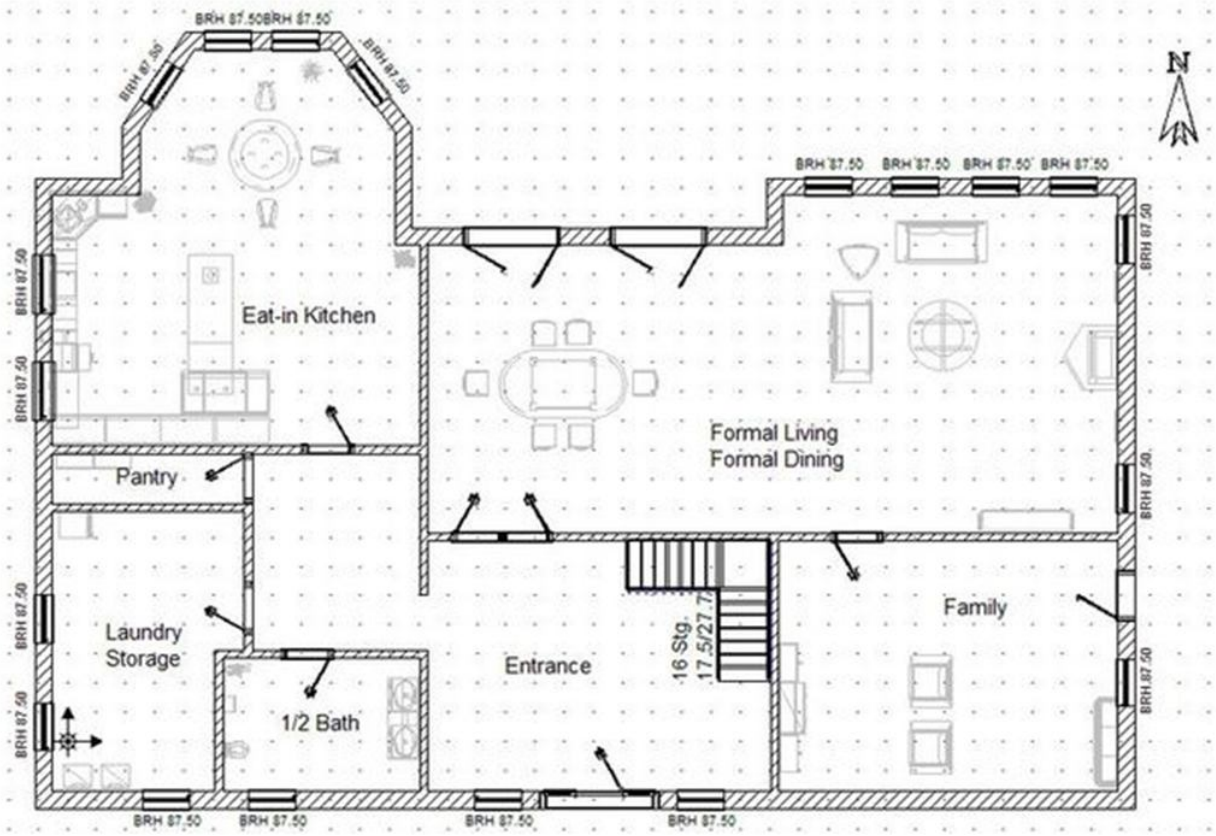

Fig. 2.5 Typical Building Plan

2.2.3 Common Symbols used in Electrical Engineering Drawing

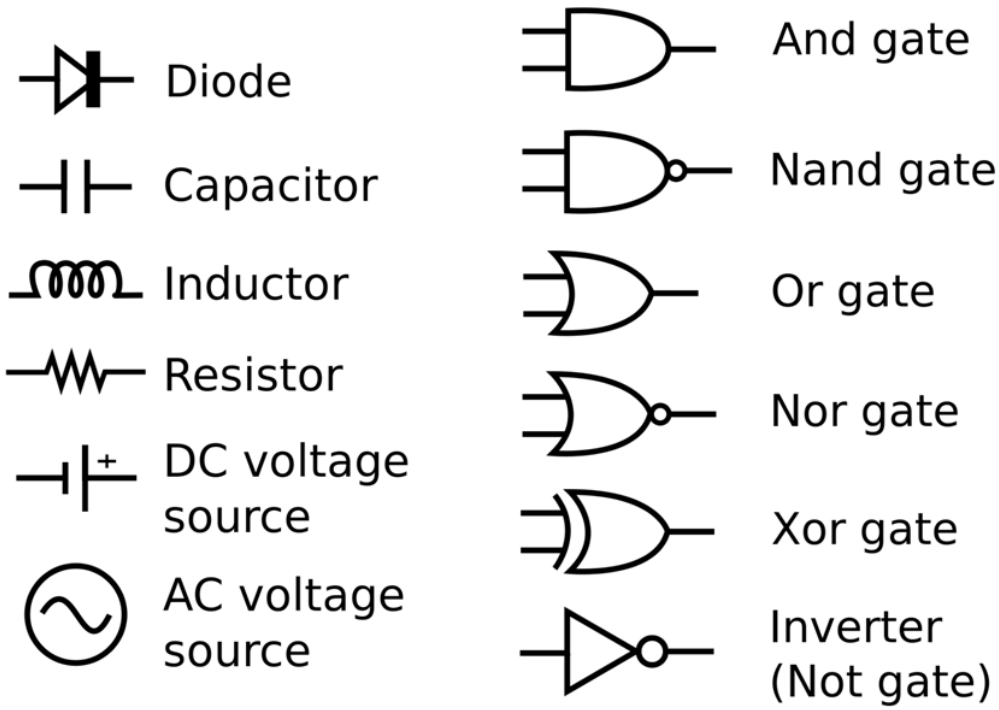

Fig. 2.6 Typical Symbols for Electrical Engineering Drawing

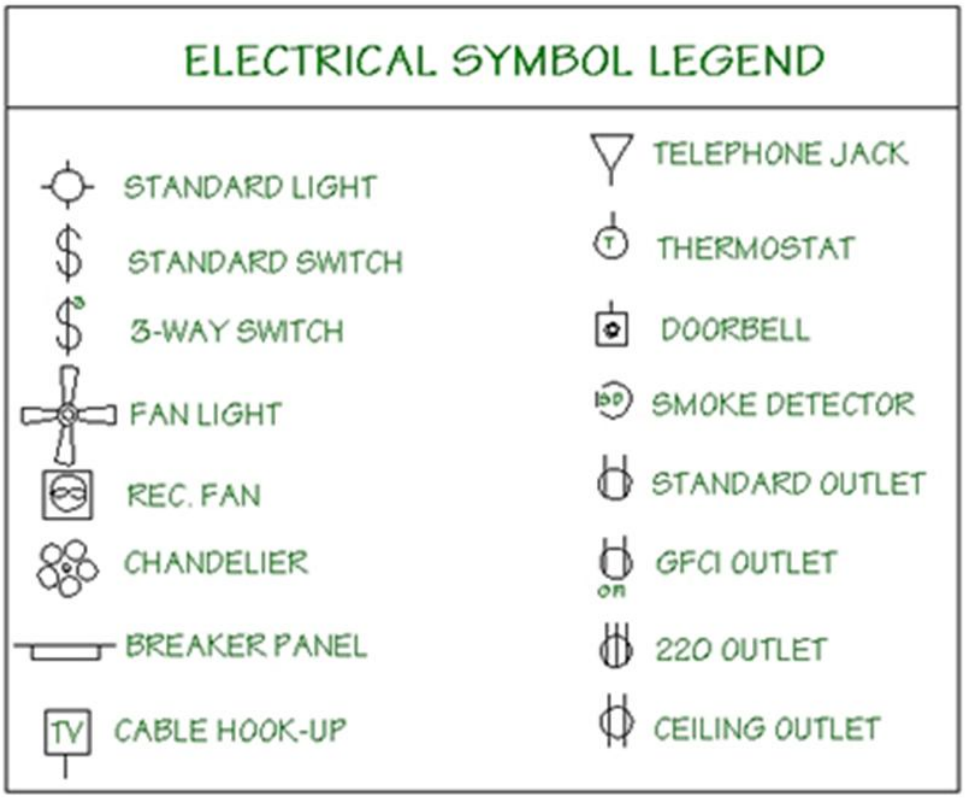

Fig. 2.7 Typical Electrical Symbols Used in Building Drawing

Exercise and Assignments

1. Make a table showing the conventional lines most commonly used in engineering drawing mentioning their specific applications.
2. Make a table showing the conventional symbols (geometric/civil/electrical/materials) most commonly used in engineering drawing with their meanings.

Review Questions

1. Why have you studied lines and symbols?
2. Draw a standard hidden/ center/ cutting plane/ section/ break line and show an example of its use.
3. What is the standard proportion of solid segments and gaps in a hidden/center line.
4. Why there is no specified proportion for dimension and extension line?
5. What is difference between applicability of a section line and a break line?
6. Which conventional lined are to be drawn with 2H pencils?
7. Which conventional lined are to be drawn with HB pencils?
8. What is the standard symbol to show diameter/ radius/ slope/ datum?
9. What is the standard symbol for single /double opening in/out doors?
10. What is the standard symbol for showing sectioning through earth/ concrete/ brick/ metal/ wood.
11. What is the standard symbol to show inductor/ resistor/ gates?
12. Draw some electrical symbol for household weiring.

CHAPTER 3
LETTERING AND NUMBERING

Objectives

Objectives of studying this chapter are:

- To know different style of lettering.
- To learn to write letters and numbers according to the standard

3.1 Letter Styles

- Gothic
- Roman
- Italic
- Text

Fig. 3.1 Different Styles of English Letters

They were all made with speedball pens, and are therefore largely single-stroke letters. If the letters are drawn in outline and filled in, they are referred to as "filled- in" letters. **The plainest and most legible style is the gothic from which our single-stroke engineering letters are derived.** The term roman refers to any letter having wide down ward strokes and thin connecting strokes. Roman letters include old romans and modern roman, and may be vertical or inclined. Inclined letters are also referred to as italic, regardless of the letter style; text letters are often referred to as old English.

3.2 Classification of Letters

3.2.1 Extended and Condensed Letters

To meet design or space requirements, letters may be narrower and spaced closer together, in which case they are called "Compressed" or "Condensed" letters. If the letters are wider than normal, they are referred to as "Extended" letters.

3.2.2 Light Face and Bold Face Letters

Letters also vary as to the thickness of the stems or strokes. Letters having very thin stems are called Light Face Letters, while those having heavy stems are called Bold Face Letters.

3.3 Technique of Lettering

"Any normal person can learn to letter if he is persistent and intelligent in his efforts." While it is true that "Practice makes perfect," it must be understood that practice alone is not enough; it must be accompanied by continuous effort to improve.

There are three necessary steps in learning to letter:

- Knowledge of the proportions and forms of the letters and the order of the strokes.
- Knowledge of composition- the spacing of the letters and words.
- Persistent practice, with continuous effort to improve.

3.4 Guide Lines

Extremely light horizontal guidelines are necessary to regulate the height of letters. In addition, light vertical or inclined guidelines are needed to keep the letters uniformly vertical or inclined. Guidelines are absolutely essential for good lettering and should be regarded as a welcome aid, not as an unnecessary requirement.

Make guidelines light, so that they can be erased after the lettering has been completed. Use a relatively hard pencil such as a 4H to 6H, with a long, sharp, conical point.

3.4.1 Guidelines for Capital Letters

On working drawings, capital letters are commonly made 3mm high, with the space between lines of lettering from ¾ th to the full height of the letters. The vertical guidelines are not used to space the letters (as this should always be done by eye while lettering), but only to keep the letters uniformly vertical, and they should accordingly be drawn at random.

A guideline for inclined capital letters is somewhat different. The spacing of horizontal guidelines is the same as for vertical capital lettering. The American Standard recommends slope of approximately 68.2^0 with the horizontal and may be established by drawing a "sloped triangle", and drawing the guidelines at random with T-square and triangles.

3.4.2 Guidelines for Lower-Case Letters

Lower-case letters have four horizontal guidelines, called the cap line, waistline, and base line and drop line. Strokes of letters that extend up to the cap line are called ascenders, and those that extend down to the drop line, descenders. Since there are only five letters (p, q.g, j, y) that have descenders, the drop lines are little needed and are usually omitted. In spacing guidelines, space "a" may vary from 3/5to 2/3 of space "b". 27The term single stoke or one stoke does not mean that the entire letter is made without lifting the pencil. But the width of the stroke is the width of the stem of the letter.

3.5 Single Stroke Lettering

The salient features of this type of lettering are:

- ✓ Greatest amount of lettering on drawings is done in a rapid single stroke letter i.e. either vertical, or inclined.
- ✓ The ability to letter and perfectly can be acquired only by continued and careful practice
- ✓ it is not a matter of artistic talent or event of dexterity in hand writing

3.6 Order of Strokes

They are necessary to have legible and accurate letter styles. In the following description an alphabet of slightly extended vertical capitals has-been arranged in-group. Study the slope of each letter with the order and direction of the storks forming it. The proportion of height and width of various letters must be known carefully to letter them perfectly.

The I-H-T Group

The letter I is The Foundation Stroke. The top of T is drawn first to the full width of the square and the stem is started accurately at its midpoint.

The L-E-F Group

The L is made in two strokes. The first two strokes of the E are the same for the L, the third or the upper stoke is lightly shorter than the lower and the last stroke is the third as long as the lower. F has the same proportion as E

The V-A-K Group

V is the same width as A, the A bridge is one third up from the bottom. The second stroke of K strikes stem one third up from the bottom and the third stroke branches from it.

The M-W Group

M may be made in consecutive strokes of the two verticals as of N. W is made with two V's.

The O-Q-C-G Group

The O families are made as full circles and made in two strokes with the left side a longer arc than the right. A large size C and G can be made more accurately with an extra stroke at the top.29

The D- U-J Group

The top and bottom stokes of D must be horizontal, fail line to observe this is a common fault with beginners. U is formed by two parallel strokes to which the bottom stroke be added. J has the same construction as U, with the first stroke omitted.

The P-R-B Group

The number of stokes depends up on the size of the letter. The middle line of P and R are on centerline of the vertical line.

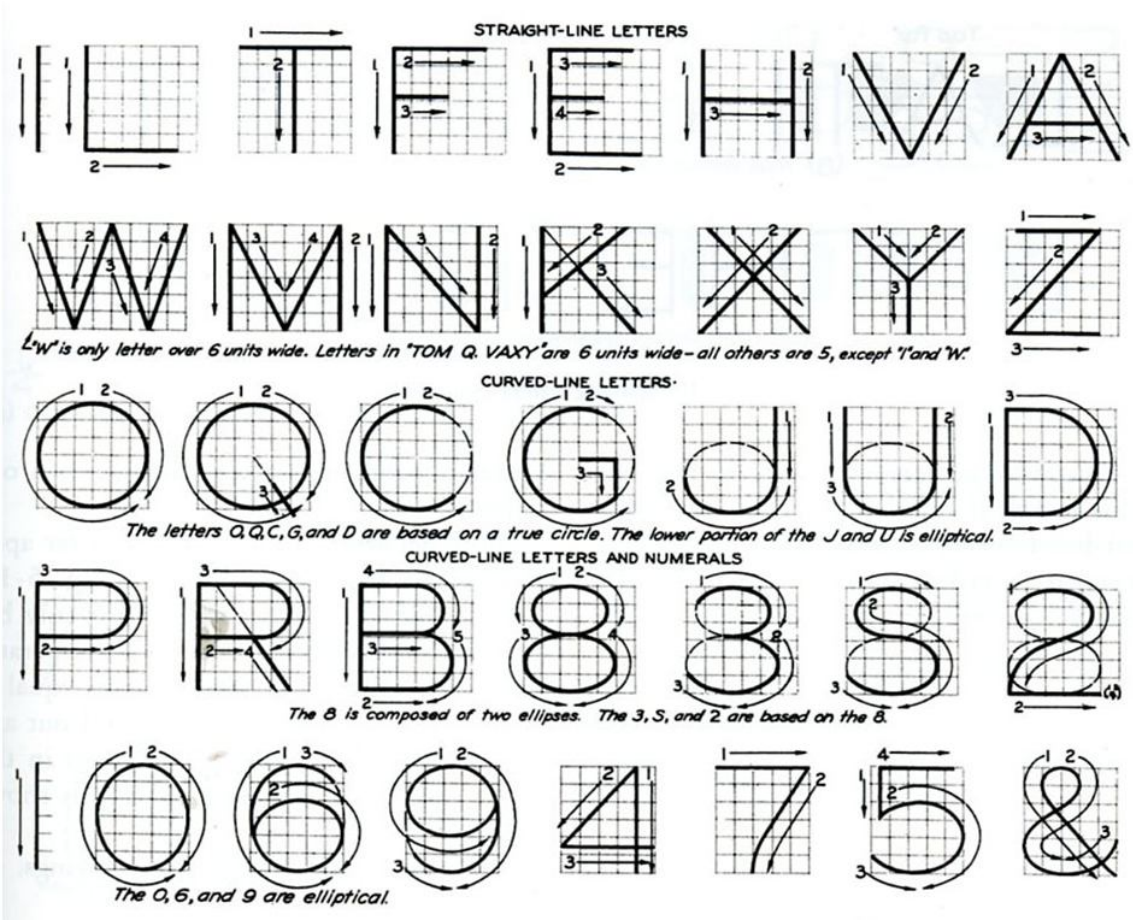

Fig. 3.2 Order of Strokes for Single Stroke Gothic Letters (Uppercase) and Numbers

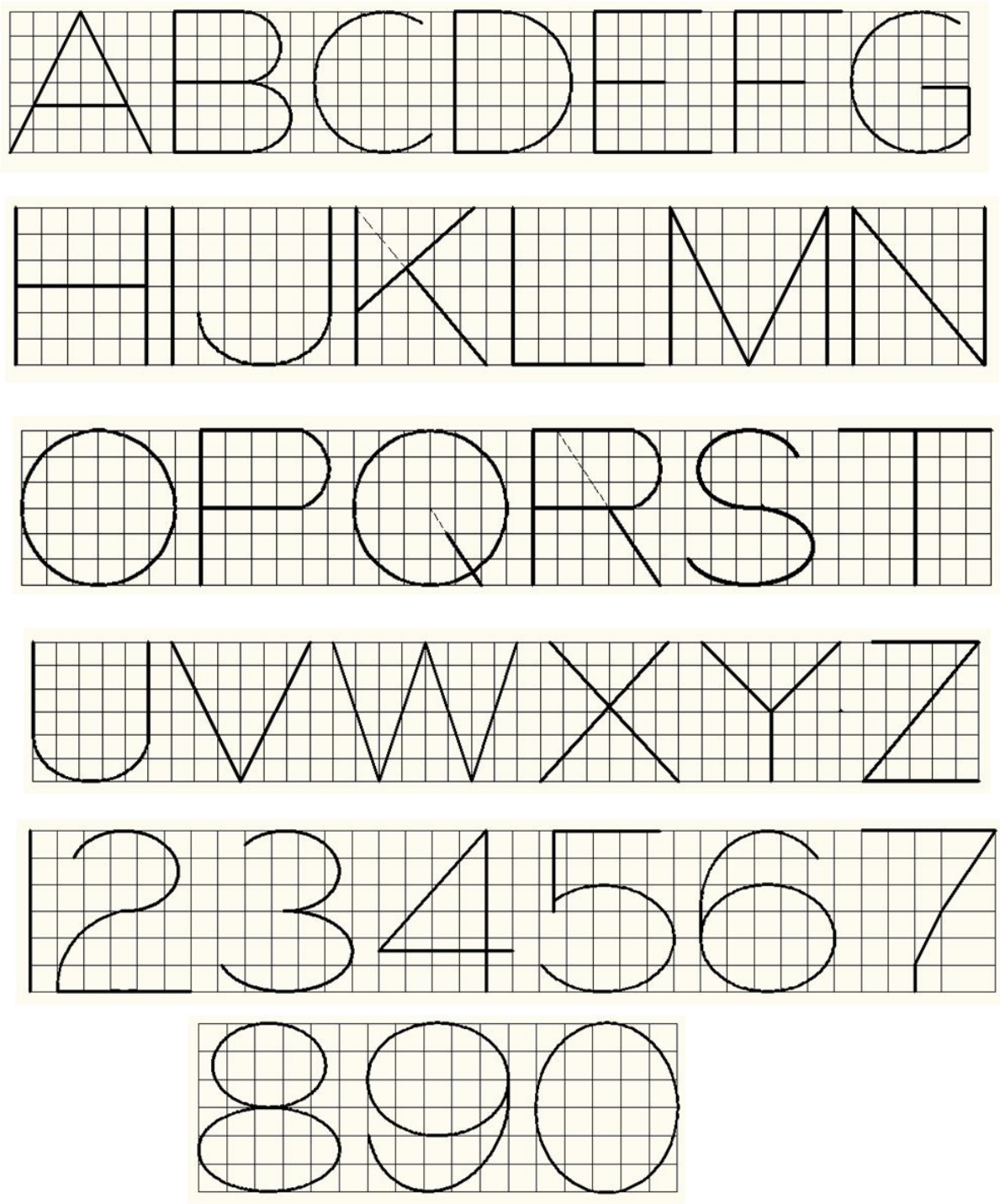

Fig. 3.3 Proportion of Width and Height for Single Stroke Gothic Letters (Uppercase) & Numbers

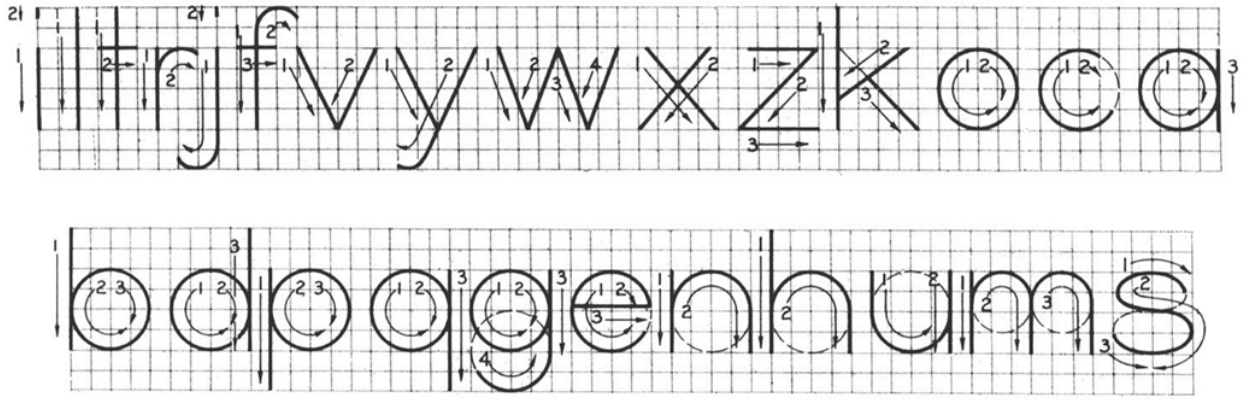

Fig. 3.4 Order of Strokes for Single Stroke Gothic Letters (Lowercase)

Fig. 3.5 Order of Strokes for Single Stroke Gothic Italic Letters (Uppercase)

3.7 Spacing of Letters

Uniformity in spacing of letters is a matter of equalizing spaces by eye. The background area between letters, not the distance between them, should be approximately equal. Some combinations, such as LT and VA, may even have to be slightly overlapped to secure good spacing. In some cases the width of a letter may be decreased. For example, the lower stroke of the L may be shortened when followed by A.

Words are spaced well apart, but letters with in words should be spaced closely. Make each word a compact unit well separated from the adjacent words. For either upper case or lower-case lettering, make the spaces between words approximately equal to a capital O. Avoid spacing letters too far apart and words too close together.

3.8 Lettering in Maps

Letters are generally used on maps as follows:

- Vertical capital: name of states, countries, towns, capitals, titles of the map etc.
- Vertical lower case: name of small towns, villages, post offices etc.
- Inclined capital: name of oceans, bays, gulfs, large lakes, rivers etc.
- Inclined lower case: name of rivers, creeks, small lakes, ponds, marshes and springs

3.9 Summary of ISO rules for Lettering

1. Most of the lettering is done in single stroke either in vertical or in inclined manner.
2. Only one style of lettering should be used throughout the drawing.
3. Lettering can be done either in free hand or using templates.
4. Proportion of Height & width
    a. For A,M,O,Q,T,V,X and Y, Height = Width.
    b. For W, height<Width..
    c. For Other latters, Height>Width.
    d. For all numbers Height>Width
5. Line thickness of lower & upper case letters are made same as well as uniform.
6. Distance between adjacent lines or space between letters or numbers $\geq 2 \times Line\ thickness$
7. If thickness of 2 adjacent line is different, spacing $= 2 \times Thickness\ of\ heavier\ line$
8. Standard height of letters and numbers are 2.5,3.5,5.0,7.0,10.0,14.0 and 20.0 mm
9. Height of letter or number$\geq 2.5mm$
10. When both capital and lower-case letters are to be combined, if c=2.5mm then h will be 3.5mm.

ISO 3098-2:2000 specification for relative dimensions of characters and spacing is illustrated here:

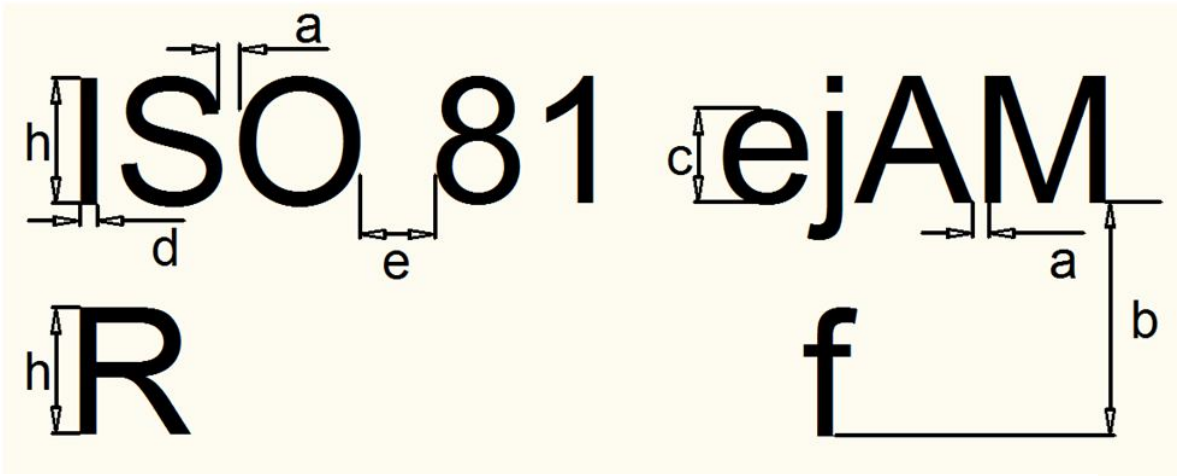

Fig. 3.6 Relative Dimensions of Letters and Numbers (ISO guideline)

Table 3.1 Lettering A (d=h/14):

Characteristics	Ratio	Dimension						
Height of capitals, h	(14/14)h	2.5	3.5	5	7	10	14	20
Height of lower-case letters, c (without step or tail)	(10/14)h	-	2.5	3.5	5	7	10	14
Spacing between characters, a	(2/14)h	0.35	0.5	0.7	1	1.4	2	2.8
Minimum spacing of base line, b	(20/14)h	3.5	5	7	10	14	20	28
Minimum spacing between words, e	(6/14)h	1.05	1.5	2.1	3	4.2	6	8.4
Thickness of line, d	(1/14)h	0.18	0.25	0.35	0.5	0.7	1	1.4

Table 3.2 Lettering B (d=h/14):

Characteristics	Ratio	Dimension						
Height of capitals, h	(10/10)h	2.5	3.5	5	7	10	14	20
Height of lower-case letters, c (without step or tail)	(7/10)h	-	2.5	3.5	5	7	10	14
Spacing between characters, a	(2/10)h	0.5	0.7	1	1.4	2	2.8	4
Minimum spacing of base line, b	(14/10)h	3.5	5	7	10	14	20	28
Minimum spacing between words, e	(6/10)h	1.5	2.1	3	4.2	6	8.4	12
Thickness of line, d	(1/10)h	0.25	0.35	0.5	0.7	1	1.4	2

Exercise and Assignments

1. Following ISO guidelines complete lettering of all the uppercase letters and numbers in "Single Stroke Gothic-Vertical" style.
2. Following ISO guidelines complete lettering of all the uppercase letters and numbers in "Single Stroke Gothic-Italic" style.
3. Following ISO guidelines complete lettering of all the lowercase letters in "Single Stroke Gothic-Vertical/Italic" style.

Review Questions:

1. Why have you studied lettering?
2. What is the difference between Gothic and Roman letters?
3. Write the letter "A"/ "a"/"T" in Gothic, Roman, Italic and Text style.
4. Which style of lettering is most commonly used in engineering drawing and why?
5. What do you mean by guidelines? Why is it used?
6. How guidelines are drawn for uppercase/lowercase letters?
7. What are the ISO rules for lettering?
8. How do you maintain the spaces between letters, words and lines?
9. Which letters have equal height and width?
10. Which letters have height>width and which one have width>height?
11. What are the standard heights of letters in engineering drawing?
12. Write a word/your name/Course code in single stroke gothic letters.

CHAPTER 4
GEOMETRIC CONSTRUCTION

Objectives

Objectives of studying geometric figures are:

- ✓ To learn to define geometric nomenclatures like angles, lines etc.
- ✓ To improve expertise in using drawing instruments.
- ✓ To learn the steps to construct different geometric figures like lines, arcs, polygon, ellipse etc. in convenient way.

4.1 Introduction

To be truly proficient in the layout of both simple and complex drawings, the drafter must know and fully understand the many geometric construction methods used. These methods are illustrated in this chapter, and are basically simple principles of pure geometry. These simple principles are used to actually develop a drawing with complete accuracy, and in the fastest time possible, without wasted motion or any guesswork. Applying these geometric construction principles give drawings a finished, professional appearance. Strict interpretation of geometric construction allows use of only the compass and an instrument for drawing straight lines but in technical drawing, the principles of geometry are employed constantly, but instruments are not limited to the basic two as T-squares, triangles, scales, curves etc. are used to make constructions with speed and accuracy. Since there is continual application of geometric principles, the methods given in this chapter should be mastered thoroughly. It is assumed that students using this book understand the elements of plane geometry and will be able to apply their knowledge.

4.2 Geometric Nomenclature

4.2.1 Points in Space

A point is an exact location in space or on a drawing surface. It is actually represented on the drawing by a crisscross at its exact location.

4.2.2 Lines

Lines are straight elements that have no width, but are infinite in length (magnitude), and they can be located by two points which are not on the same spot but fall along the line. Lines may be straight lines or curved lines. A straight line is the shortest distance between two points.

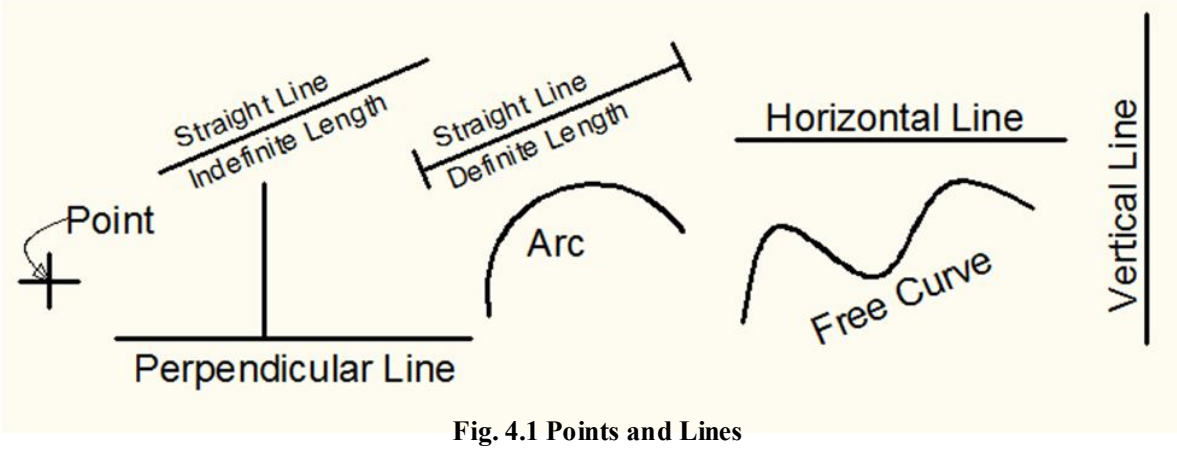

Fig. 4.1 Points and Lines

4.2.3 Angle

An angle is formed by the intersection of two lines. There are three major kinds of angles: right angels, acute angles and obtuse angles.

4.2.4 Triangles

A triangle is a closed plane figure with three straight sides and their interior angles sum up exactly 180^0. The various kinds of triangles: a right triangle, an equilateral triangle, an isosceles triangle, and an obtuse angled triangle.

4.2.5 Quadrilateral

It is a plane figure bounded by four straight sides. When opposite sides are parallel, the quadrilateral is also considered to be a parallelogram.

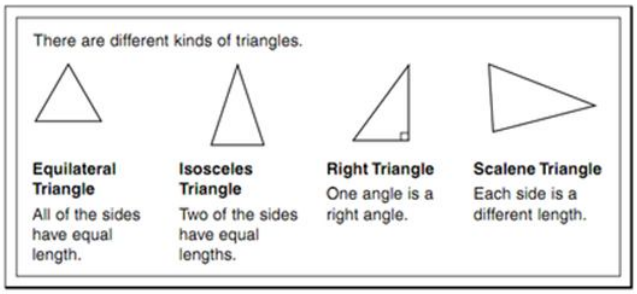

Fig. 4.2 Triangles

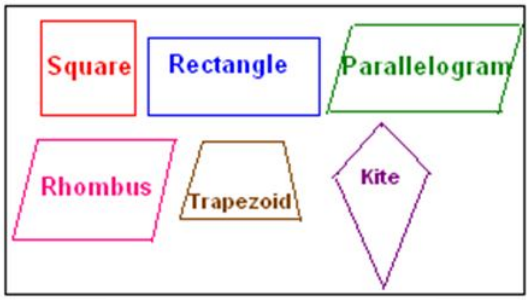

Fig. 4.3 Quadrilaterals

4.2.6 Polygon

A polygon is a closed plane figure with three or more straight sides. The most important of these polygons as they relate to drafting are probably the triangle with three sides, square with four sides, the hexagon with six sides, and the octagon with eight sides. A polygon is said to be "Regular Polygon" when all of its sides are equal in length and each of the internal angles formed at corners are equal in magnitude. Some helpful relations to be remembered for regular polygons are:

1. $Magnitude\ of\ any\ internal\ angle\ = \frac{(n-2)\pi}{n};\quad here,\ n = no.of\ sides.$
2. $Radius\ of\ outscribing\ circle, R = \frac{S}{2sin\frac{\pi}{n}};\quad here,\ s = length\ of\ each\ side\ and\ n = no.of\ sides.$
3. $No.of\ diagonals = \frac{n(n-3)}{2}$

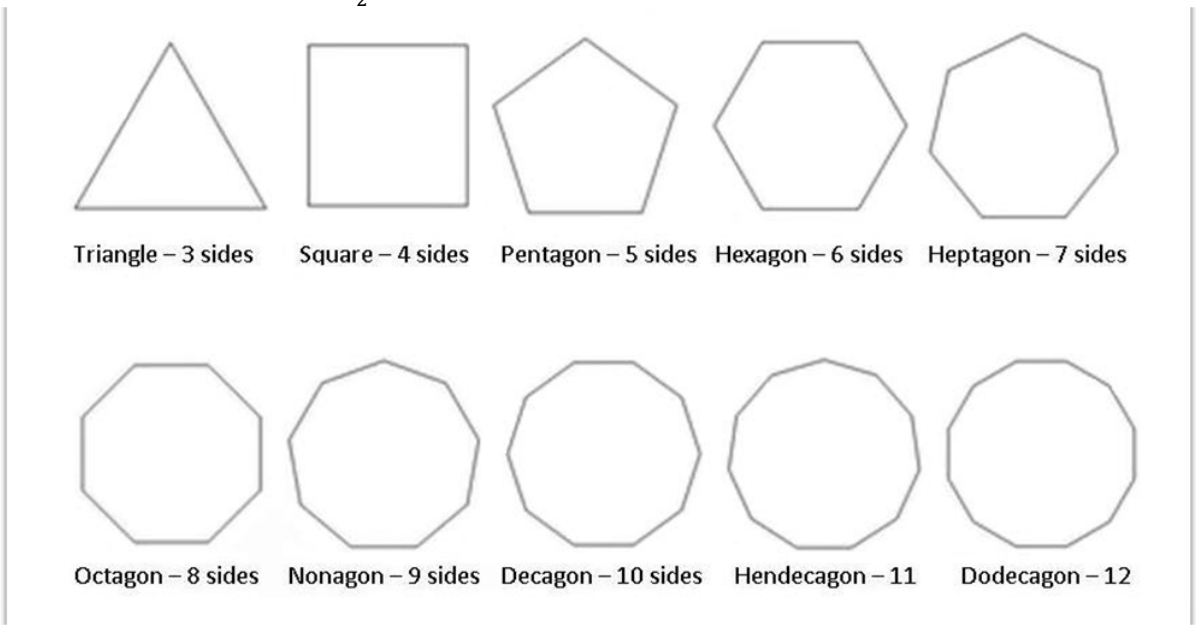

Fig. 4.4 Polygons

4.2.7 Circle

A circle is a closed curve with all points on the circle at the same distance from the center point. The major components of a circle are the diameter, the radius and circumference.

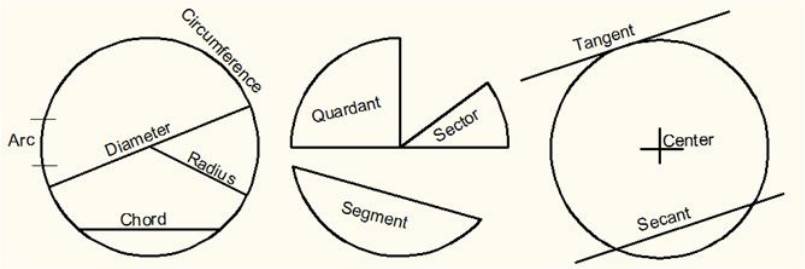

Fig. 4.5 Circles

4.2.8 Solids

They are geometric figures bounded by plane surfaces. The surfaces are called faces, and if these are equal regular polygons, the solids are regular polyhedral.

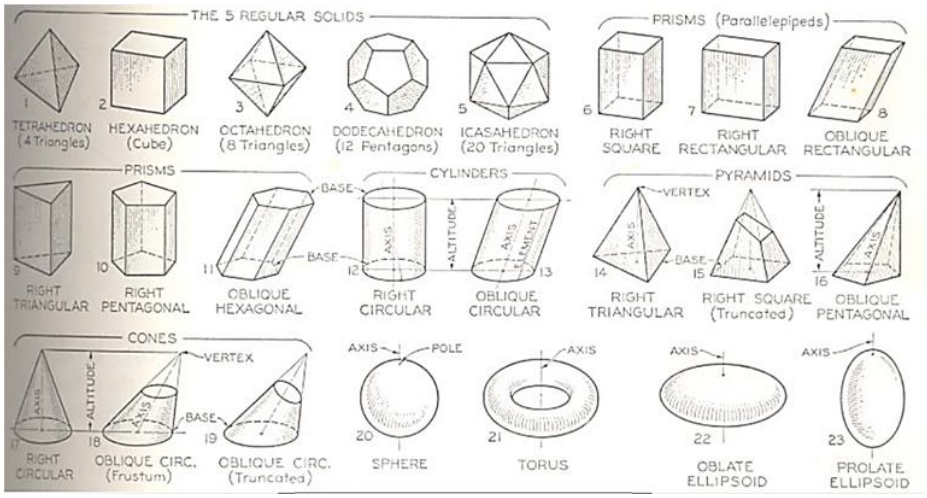

Fig. 4.6 Solids

4.3 Techniques of Geometric constructions

To construct the above mentioned geometric figures, we have to know some principles and procedures of geometric construction. Thus, the remaining of this chapter is devoted to illustrate step-by-step geometric construction procedures used by drafters and technicians to develop various geometric forms. First of all we have to be well-expertise in using set squares particularly for drawing parallel and perpendicular lines. Fig. 4.7 illustrates it.

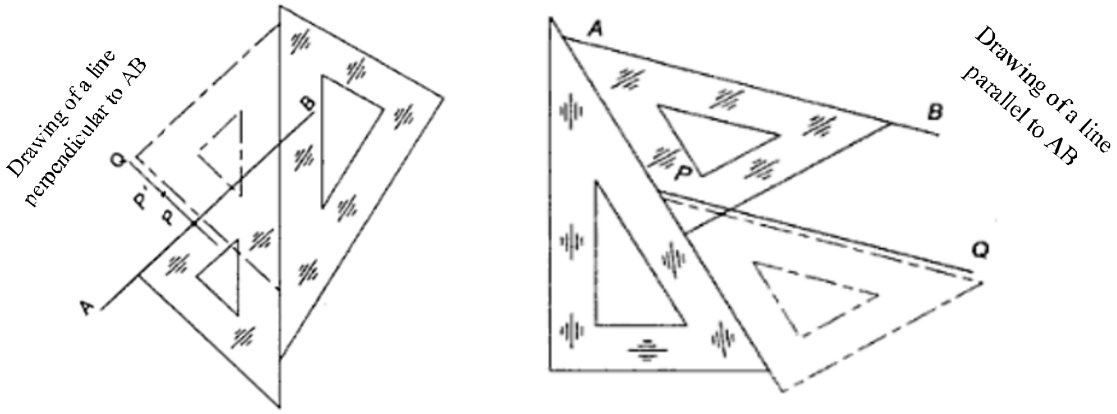

Fig. 4.7 Use of Set-Square for Making Parallel and Perpendicular Lines

4.3.1 How to Bisect a Line or an Arc

To bisect a line means to divide it in half or to find its center point. In the given process, a line will also be constructed at the exact center point at exactly 90^0.

Given: Line A-B

- ✓ **Step 1**: Set the compass approximately two-thirds of the length of line A-B and swing an arc from point A.
- ✓ **Step 2:** Using the exact same compass setting, swing an arc from point B.
- ✓ **Step 3:** At the two intersections of these arcs, locate points D and E
- ✓ **Step 4:** Draw a straight-line connecting point D with point E. Where this line intersects line A-B, it bisects line A-B. Line D-E is also perpendicular to line A-B at the exact center point.

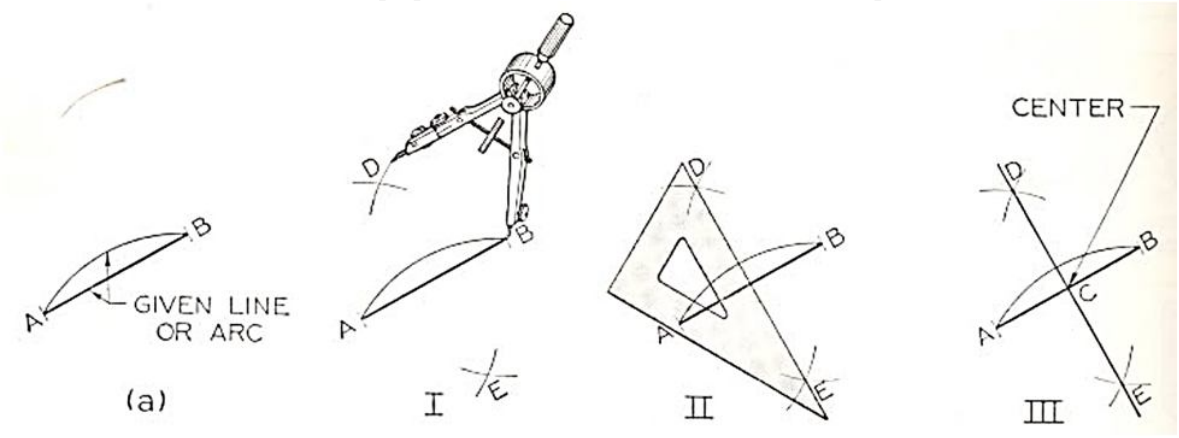

Fig. 4.8 Bisecting an Arc or a Line

4.3.2 How to Divide a Line into a Number of Equal Parts

Given: Line A-B

- ✓ **Step 1:** Draw a construction line AC that starts at end A of given line AB. This new line is longer than the given line and makes an angle preferably of not more than 30^0 with it.
- ✓ **Step 2:** Find a scale that will approximately divide the line AB in to the number of parts needed (5 in the example below), and mark these divisions on the line AC. There are now 'n' equal divisions from A to D that lie on the line AC (5 in this example).
- ✓ **Step 3:** Set the adjustable triangle to draw a construction line from point D to point B. Then draw construction lines through each of the remaining 'n-1' divisions parallel to the first line BD by sliding the triangle along the straight edge. The original line AB will now be accurately divided.

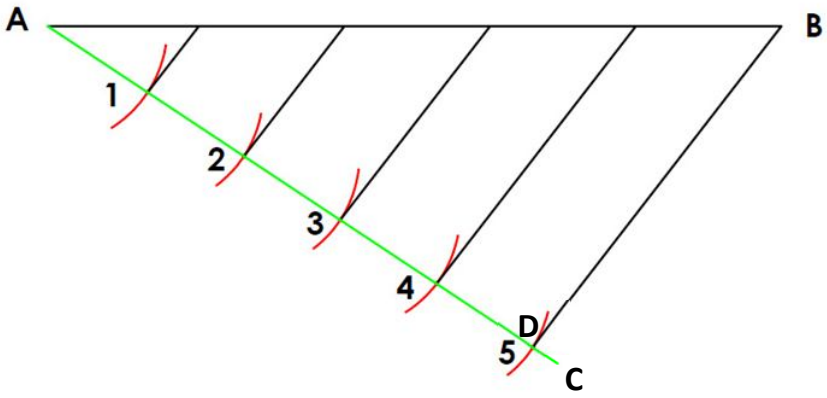

Fig. 4.9 Dividing a Line into 7 Equal Parts

4.3.3 How to Bisect an Angle

To bisect an angle means to divide it in half or to cut it in to two equal angles.

Given: Angle BAC

- ✓ **Step 1:** Set the compass at any convenient radius and swing an arc from point A
- ✓ **Step 2:** Locate points E and F on the legs of the angle, and swing two arcs of the same identical length from points E and F, respectively.
- ✓ **Step 3:** Where these arcs intersect, locate point D. Draw a straight line from A to D.This line will bisect angle BAC and establish two equal angles: CAD and BAD.

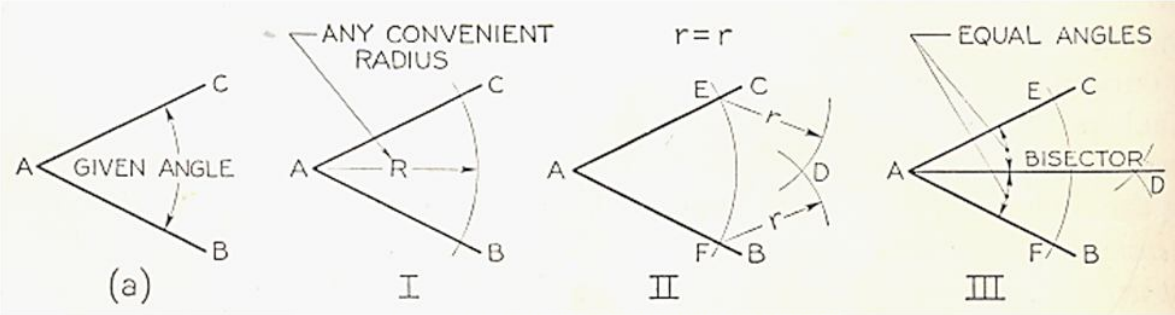

Fig. 4.10 Bisecting an Angle

4.3.4 How to Draw an Arc or Circle (Radius) through Three Given Points

Given: Three points in space at random: A, B and C.

- ✓ **Step 1:** With straight line, lightly connect points A to B, and B to C,
- ✓ **Step 2:** Using the method outlined for bisecting a line, bisect lines A-B and B-C
- ✓ **Step 3:** Locate point X where the two extended bisectors meet. Point X is the exact center of the arc or circle.
- ✓ **Step 4:** Place the point of the compass on point X and adjust the lead to any of the points A, B, or C (they are the same distance), and swing the circle. If all work is done correctly, the arc or circle should pass through each point.

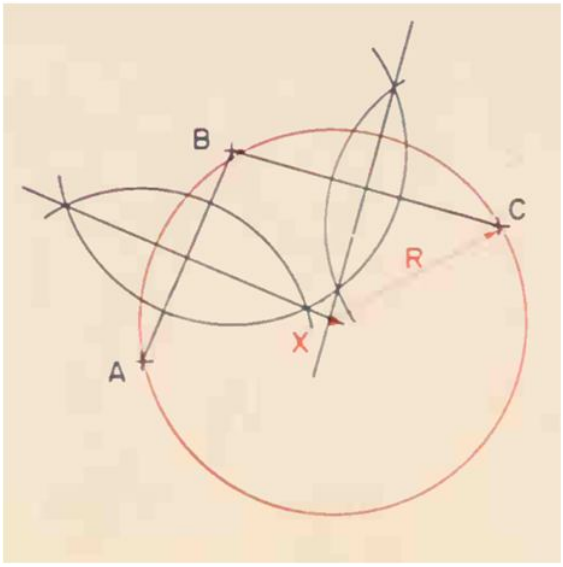

Fig. 4.11 Drawing of Arc Through 3 Points

4.3.5 How to Transfer an Odd Shape (Triangular)

Given: Triangle ABC.

- ✓ **Step 1:** Letter or number the various corners and point locations of the odd shape in counterclockwise order around its perimeter. In this example, place the compass point at point A of the original shape and extend the lead to point B. Swing a light arc at the new desired location. Letter the center point as A' and add letter B' at any convenient location on the arc. It is a good habit to lightly letter each point as you proceed.
- ✓ **Step 2.** Place the compass point at letter B of the original shape and extend the compass lead to letter C of the original shape.
- ✓ **Step 3.** Transfer this distance, B-C, to the layout.
- ✓ **Steps 4 and 5.** Going back to the original object, place the compass point at letter A and extend the compass lead to letter C. Transfer the distance A-C as illustrated in Figure. Locate and letter each point.
- ✓ **Step 6.** Connect points A', B', and C' with light, straight lines. This completes the transfer of the object. Recheck all work and, if correct, darken lines to the correct line weight.

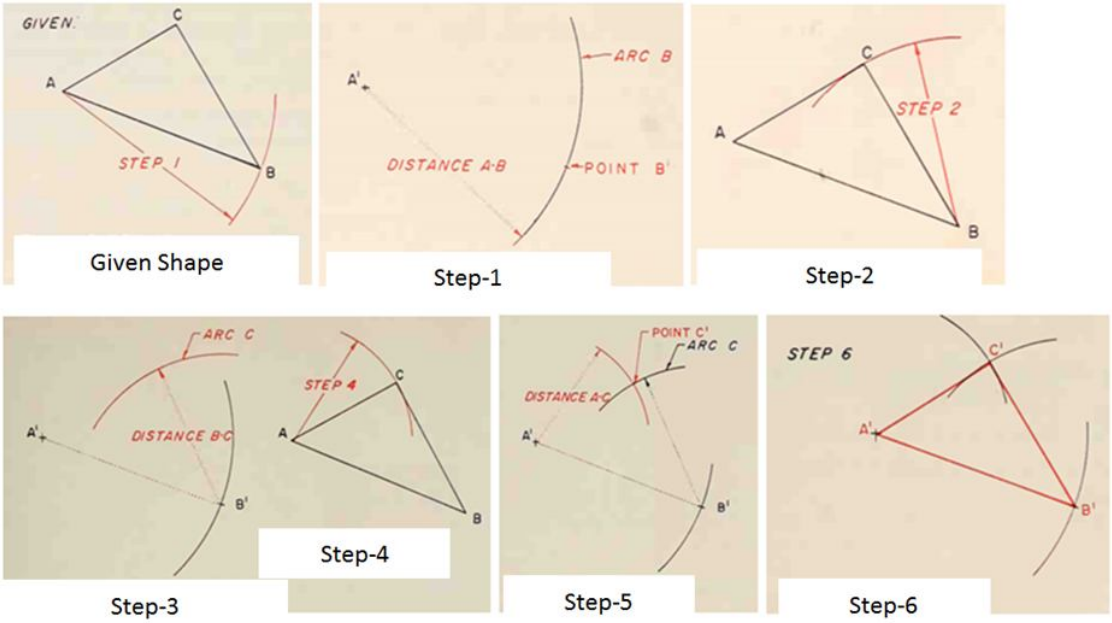

Fig. 4.12 Transferring a Triangle to Another Location

4.3.6 How to Transfer Complex Shapes

A complex shape can be transferred in exactly the same way by reducing the shape into simple triangles and transferring each triangle using the foregoing method.

Given: An odd shape, A, B, C, D, E, F, G.

- ✓ **Step 1:** Letter or number the various corners and point locations of the odd shape in clockwise order around the perimeter. Use the longest line or any convenient line as a starting point. Line A-B is chosen here as the example. Lightly divide the shape into triangle divisions, using the baseline if possible. Transfer each triangle in the manner described in previous procedure. Suggested triangles to be used in example are ABC, ABD, ABE, ABF and ABG.
- ✓ **Step 2:** This completes the transfer. Check all work and, if correct, darken in lines to correct line thickness.

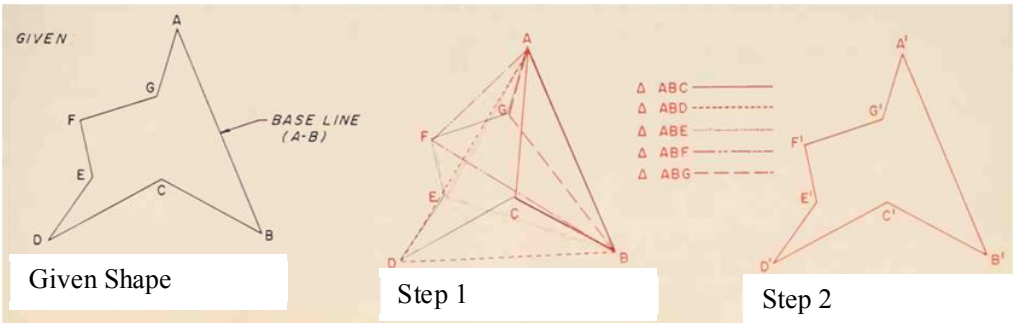

Fig. 4.13 Transferring a Complex Shape to Another Location

4.3.7 How to Draw A Pentagon (5 Sides)

Given: The locations of the pentagon center and the diameter of circle that will circumscribe the pentagon.

- ✓ **Step 1**: Draw the circle with given diameter taking given location as center (C). Letter a diameter as HB.
- ✓ **Step 2**: Draw a perpendicular CD that meets the circumference at D.
- ✓ **Step 3:** Bisect radius CB at A.
- ✓ **Step 4:** With A as center, and CD as radius, strike arc DE that meets the radius CH at E.
- ✓ **Step 5:** With D as center, and DE as radius, strike arc EF that meets the nearest circumference at F.
- ✓ **Step 6:** Draw line DF, this is the length of one side. Now set off distances DE around the circumference of the circle, and draw the sides through these points.

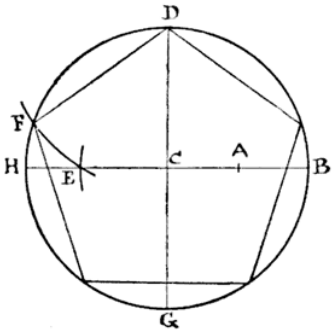

Fig. 4.14 Drawing of a Pentagon

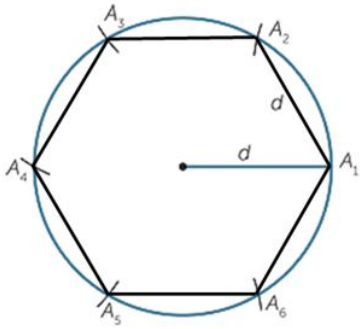

Fig. 4.15 Drawing of a Hexagon

4.3.8 How to Draw a Hexagon (6 Sides)

Given: The locations of the hexagon center and the diameter of circle that will circumscribe the hexagon.

- ✓ **Step 1**: Draw the circle with given diameter taking given location as center.
- ✓ **Step 2**: Extend the compass upto a length equal to the radius of the ciecle.
- ✓ **Step 3:** Starting from any point, say A_1, on the circumference, cut 6 equal segments and mark the points as A_1, A_2, A_3, A_4, A_5 and A_6.
- ✓ **Step 4:** Join each 2 consecutive points to obtain the hexagon $A_1\ A_2\ A_3\ A_4\ A_5A_6$.

4.3.9 How to Draw an Octagon (8 Sides)

Given: The locations of the octagon center and the diameter of circle that will be inscribed by the octagon.

- ✓ **Step 1**: Draw the circle with given diameter taking given location as center.
- ✓ **Step 2**: Draw any two mutually perpendicular diameters.
- ✓ **Step 3**: Draw tangents to the circle at the ends of diameters to obtain a square.
- ✓ **Step 4**: Draw diagonals of the square. Diagonals will intersect the circle at 4 points.
- ✓ **Step 5**: Draw tangent to the circle at the 4 intersection points obtained in step 4. These tangents will meet the sides of square drawn in step 3. Now darken the obtained octagon.

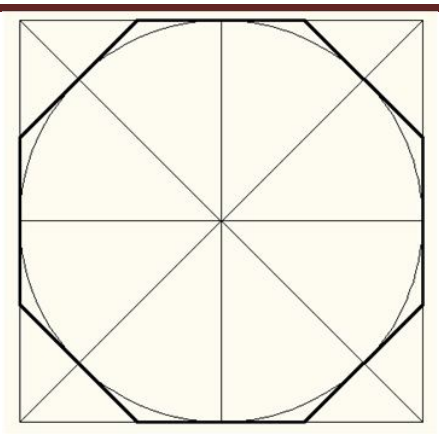

Fig. 4.16 Drawing of an Octagon

4.3.10 How to Draw any Sided Regular Polygon

i. Given: Number of sides and the diameter of circle that will circumscribe the polygon.

- ✓ **Step 1**: Draw the circle with given diameter taking given location as center. Mark a diameter. As example let us draw a 7 sided polygon. Mark the diameter as 0-7.
- ✓ **Step 2**: Divide the diameter in "n" equal segments using parallel line method. Here n=7 for our case.
- ✓ **Step 3**: Construct an equilateral triangle (0-7-8) with the diameter (0-7) as one of its sides.
- ✓ **Step 4**: Draw a line from the apex (point 8) through the second point on the line (point 2) and extend line 8-2 until it intersects the circle at point 9.
- ✓ **Step 5**: Now 0-9 is the length of each side of the polygon. Taking 0-9 as radius of compass, cut the circumference in 7 equal segments to obtain the corners of the seven sided polygon and connect the points.

ii. Given: Length of one side and number of sides (i.e. 5 for pentagon, 6 for hexagon, 8 for octagon etc.)

- ✓ **Step 1:** Calculate one internal angle of the polygon using formula $\frac{(n-2)\pi}{n}$;
- ✓ **Step 2:** Draw a line of length equal to the given side.
- ✓ **Step 3:** Draw the obtained internal angle at one end of the line and set off distances equal to the given side.
- ✓ **Step 4:** Continue **r**epeating the step 3 until you reach another end of 1st line. Thus the polygon will be drawn.

iii. Given: Number of sides and diameter of out scribing circle.

- ✓ **Step 1:** Draw the circle. Using protractor, Draw an angle equal to $\frac{360^\circ}{n}$ at the center of circle where n = number of sides.
- ✓ **Step 2:** The lines drawn for the angle cuts the circle at A and B. Then AB is the length of one side. Now set off distances AB around the circumference of the circle, and draw the sides through these points.

iv. Given: Number of sides and diameter of inscribing circle.

- ✓ **Step 1:** Draw the circle. Using protractor, Divide the central 360^0 angle into "n" number of equal part by drawing "n" number of angles each equal to $\frac{360^\circ}{n}$ at the center of circle where n = number of sides.
- ✓ **Step 2:** The lines drawn for the angles cuts the circle at A, B, C, D…. etc. At each point of intersection draw a tangent to the circle. The tangents will meet each other at 1, 2, 3, 4…… etc. Then 1-2-3-4-….. is the required polygon.

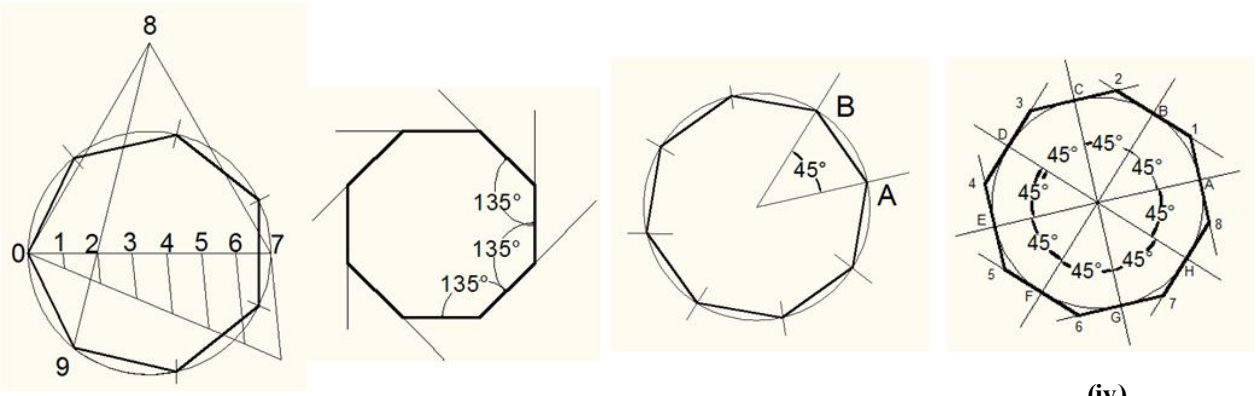

(i) (ii) (iii) (iv)

Fig. 4.17 Drawing of Any Sided Polygon

4.3.11 How to Locate the Center of a Given Circle

Given: A circle without a center point.

- ✓ **Step 1:** Using the T-square, draw a horizontal line across the circle approximately halfway between the estimated center of the given circle and the uppermost point on the circumference. Label the end points of the chord thus formed as A and B.
- ✓ **Step 2:** Draw perpendicular lines (90°) downward from points A and B. Locate points C and D where these two lines pass through the circle.
- ✓ **Step 3:** Carefully draw a straight line from point A to point D and from point C to point B. Where these lines cross is the exact center of the given circle. Place a compass point on the center point; adjust the lead to the edge of the circle and swing an arc to check that the center is accurate.

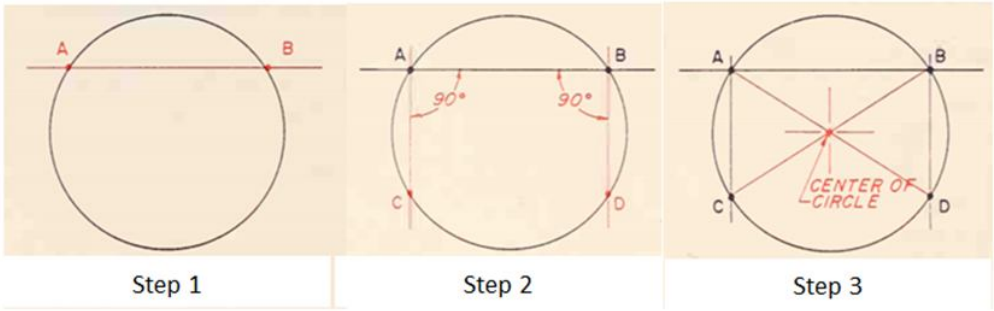

Fig. 4.18 Locating the Center of Given Circle

4.3.12 How to Draw Arc Tangent to a Straight Line and a Curve

Given: Straight line AB, an arc with a center point O or radius r, and a required radius (R) of arc tangent.

- ✓ **Step 1:** Take a radius equal to $r + R$, place the needle of compass at the center of given curve and draw an arc EF.
- ✓ **Step 2:** Draw a line CD parallel to AB at a distance R so that the line CD and arc EF intersects at point G.
- ✓ **Step 3:** Taking G as center and R as radius draw an arc. This arc will touch the line AB and the given arc.

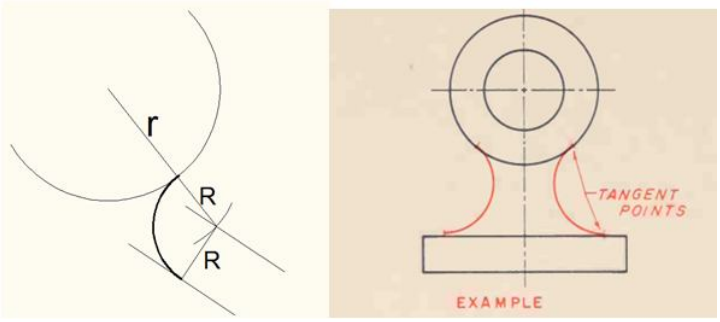

Fig. 4.19 Drawing of Arc Tangent to a Straight Line and Curve

4.3.13 How to Draw Arc Tangent to Two Arcs of Different Radius

Given: Two arcs AB, CD with their center point O_1 and O_2 or radius r_1 and r_2, and a required radius (R) of arc tangent.

- ✓ **Step 1:** If radius of arcs are not given but their center location is known, say O_1 and O_2 ; Take any point P on the 1st arc and taking it as center draw an arc EF with radius R. Join O_1P and extend it until it meets the curve EF at Q. Take O_1 as center and O_1Q as radius draw another arc QS. If the radius of arcs are given then simply take O_1 as center and draw the arc QS by taking radius equal to r_1+R.
- ✓ **Step 2:** Following similar method as in step 1, draw another arc TS taking O_2 (Center of 2nd arc) as center such that TS intersects QS at S.
- ✓ **Step 3:** Take S as center and R as radius, draw an arc that will touch the given 2 arcs.

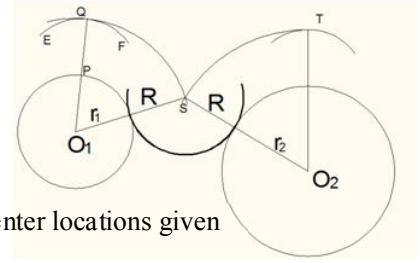

Center locations given

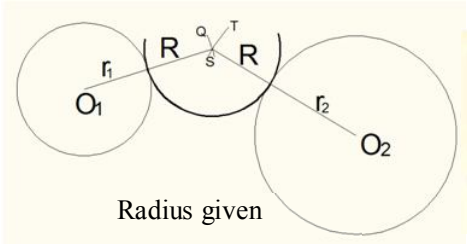

Radius given

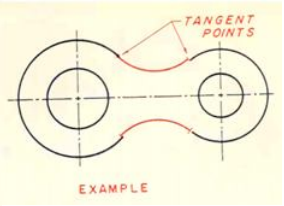

Fig. 4.20 Drawing of Arc Tangent to 2 Arcs

4.3.14 How to Draw an Ogee Curve

An ogee curve is used to join two parallel lines. It forms a gentle curve that reverses itself in a neat symmetrical geometric form.

Given: Parallel lines A-B and C-D.

- ✓ **Step 1**: Draw a straight line connecting the space between the parallel lines. In this example, from point B to point C.
- ✓ **Step 2:** Make a perpendicular bisector to line B-C to establish point X.
- ✓ **Step 3**: Make perpendicular bisectors to the lines B-X and X-C.
- ✓ **Step 4**: Draw a perpendicular from line A-B at point B to intersect the perpendicular bisector of B-X, which locates the first required swing center. Draw a perpendicular from line C-D at point C to intersect the perpendicular bisector of C-X which locates the second required swing center.
- ✓ **Step 5**: Place the compass point on the first swing point and adjust the compass lead to point B, and swing an arc from B to X. Place the compass point on the second swing point and swing an arc from X to C. This completes the ogee curve.

Note: point X is the tangent point between arcs. Check and. if correct, darken in all work.

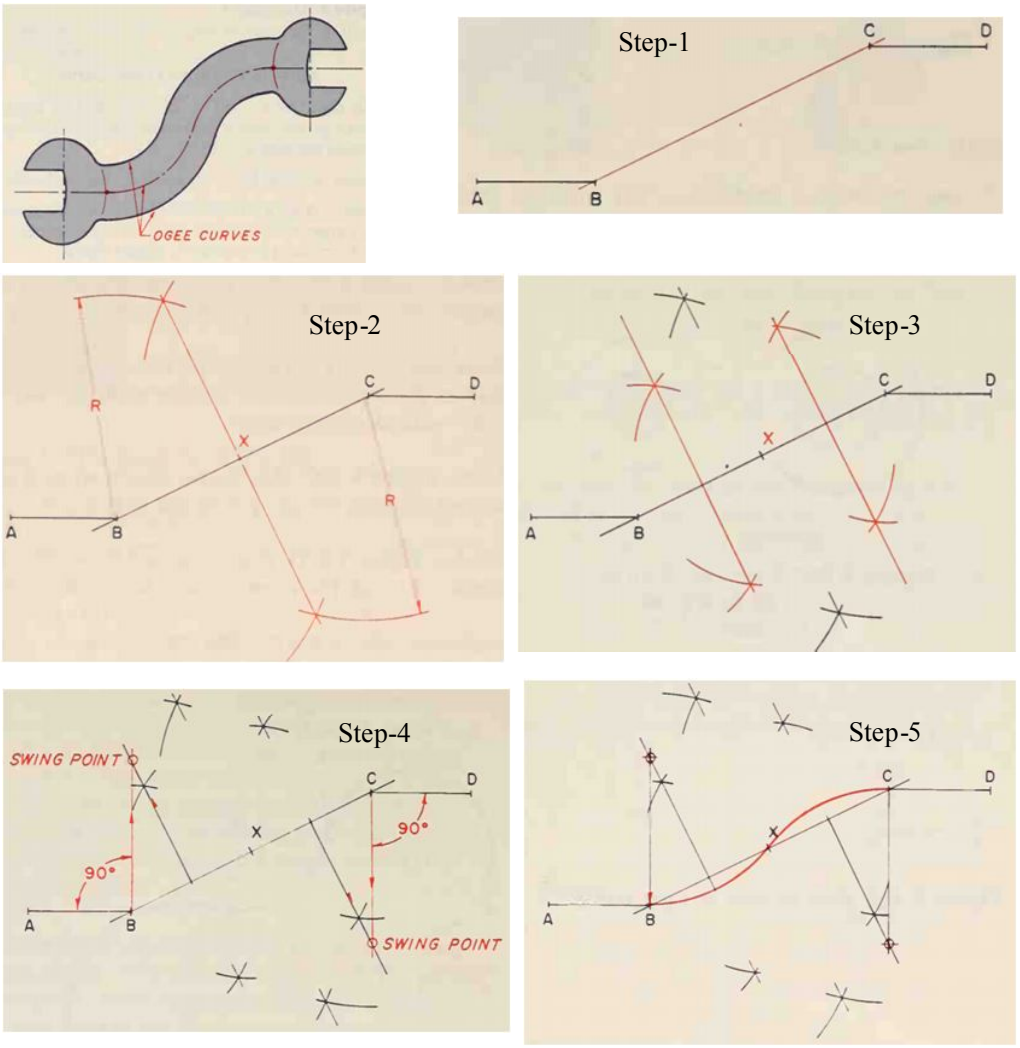

Fig. 4.21 Drawing of an Ogee Curve

4.3.15 How to Draw Straight Tangent to Two Arcs of Different Radius

Given: Two arcs of different radius and their center location A and B or radius r_1 , r_2 and center distance AB.

- ✓ **Step 1**: Consider the two given circles with centers A and B respectively. If r_1 , r_2 and AB are given draw them accordingly.
- ✓ **Step 2:** Draw any radius of the curve having larger diameter, BC, in example. Cut BD=radius of curve with smaller diameter. Taking center as B and radius as CD draw an arc EF. If value of r_1 , r_2 are given simply draw the arc EF taking radius as r_2- r_1 and center as B.
- ✓ **Step 3:** Using set square draw a tangent AF to the arc EF from point A.
- ✓ **Step 4:** Join BF and extend it until it meets the given curve at P.
- ✓ **Step 5:** Complete the rectangle AFPQ. Then PQ will be the required tangent.

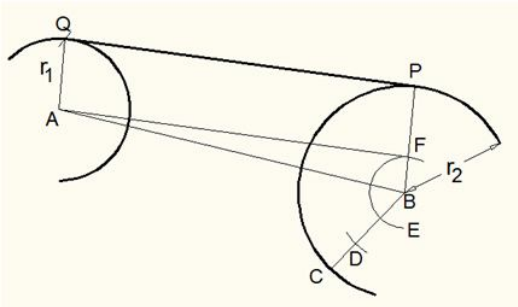

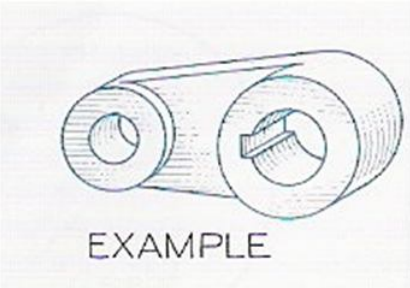

Fig. 4.22 Drawing of a Common Tangent to 2 Curves

4.3.16 How to Draw an Ellipse (Four-centered Approximate Method)

Given: Major and Minor axis length (say, a and b respectively).

- ✓ **Step 1**: Draw a line PQ=a and find out its mid-point O. At O draw a perpendiculars OR=OS=b/2.
- ✓ **Step 2**: Taking center O and radius OP, draw an arc PA that intersects the extended minor axis (RS) at A.
- ✓ **Step 3**: Join PR. Taking R as center and RA as radius draw an arc that intersects PR at B.
- ✓ **Step 4**: Bisect PB at C and draw a perpendicular at C that intersects the extended minor axis (RS) at D. The line CD also intersects PO at E.
- ✓ **Step 5**: Draw OE' equal to OE and OD' equal to OD. Join DE', D'E and D'E' and extend them.
- ✓ **Step 6**: Taking D and D' as centers and DR or D'S as radius draw 2 arcs MRN and KSL respectively.
- ✓ **Step 7:** Taking E and E' as centers and PE or QE' as radius draw another 2 arcs KPM and NQL respectively. Thus the ellipse will be completed.

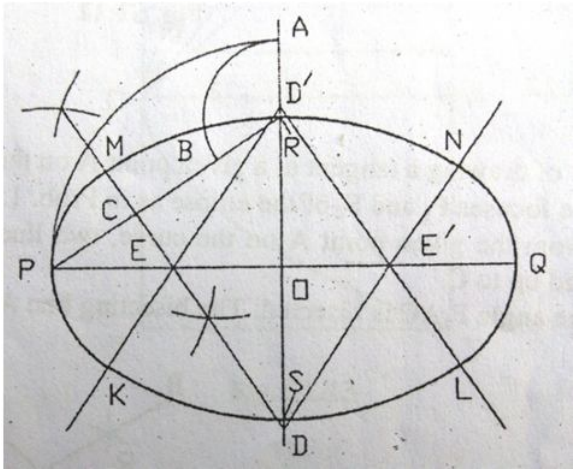

Fig. 4.23 Drawing of an Ellipse

Exercise and Assignments

1. Divide a line of length 40mm into 7 equal parts.
2. Draw a circle touching three points A, B and C with coordinates A(0,0), B(0,20) and C(15,0).
3. Draw a regular pentagon inscribing a circle of diameter 80mm. Avoid use of protractor.
4. Draw a regular pentagon out scribing a circle of diameter 100mm.
5. Draw a regular pentagon having length of side as 45mm.
6. Draw a regular hexagon inscribing a circle of diameter 80mm. Avoid use of protractor.
7. Draw a regular hexagon out scribing a circle of diameter 100mm.
8. Draw a regular hexagon having length of side as 45mm.
9. Draw a regular octagon inscribing a circle of diameter 80mm. Avoid use of protractor.
10. Draw a regular octagon out scribing a circle of diameter 100mm. Avoid use of protractor.
11. Draw a regular octagon having length of side as 45mm.
12. Draw a 9 sided regular polygon inscribing a circle of radius 50mm.
13. A 80mm long horizontal straight line is located outside a circle of radius 30mm, such that a 50mm line drawn from center of the circle meets the mid-point of the straight line at right angle. Draw two arc tangents, each having a radius of 40mm touching the circle and one of the ends of the straight line.
14. Draw a common arc tangent of radius 70mm to the two circles having their centers 80mm apart and having diameters of 50mm and 30mm respectively.
15. Draw an ogee curve to connect two parallel lines each of length 20mm and their mid-points spaced 30mm vertically and 70mm horizontally.
16. Two wheels with diameters 3.5m and 2m are required to be provided with a belt. Draw the line diagram of the arrangement. Use a reduced scale.
17. Draw an ellipse having major and minor axis length as 90mm and 60mm.

Review Questions

1. Why have you studied geometric drawings?
2. Name the geometric nomenclatures and draw a qualitative shape of them.
3. Name and draw the different types of lines.
4. What do you mean by isosceles, equilateral and scalene triangle?
5. What are different types of quadrilaterals? Draw them.
6. What is the difference between parallelogram, trapezoid, rectangle, square and rhombus?
7. What is name of a 5/6/7/8/9/10/11/12 sided polygon?
8. What do you mean by regular polygon?
9. How can you calculate summation of all internal angles of a polygon?
10. Calculate one internal angle of a 5/7/9/11 sided regular polygon.
11. How can you calculate the length of one side of a regular polygon from the radius/diameter of the circle that circumscribes it?
12. A circle has a diameter of 100cm. What will be the length of side of a 5/7/9/11 sided regular polygon drawn inscribing the circle?
13. How many diagonals are possible for a 5/7/9/11 sided polygon?
14. Draw a circle showing chord, diameter, radius, arc, segment and sector.
15. Name some solid geometric form.
16. What is the solid form of a square/circle/triangle?
17. Draw a parallel or perpendicular line to a given line at any point using set-square.
18. Divide a given line into 3/5/9 parts.
19. Find the half, $1/4^{th}$, $1/8^{th}$ of a given angle without protractor.
20. Transfer a given polygon to other specified point.
21. Locate the center of a given circle.
22. Draw a tangent to the two given circle.

CHAPTER 5
DIMENSIONING

Objectives

Objectives of studying dimensioning are:

- To know the purposes of dimensioning
- To understand the differences between dimension line, extension line, leaders etc.
- To know the guidelines of dimension system.
- To learn to draw the dimension of technical drawings as per the standard

5.1 Purpose of Dimensioning

The purpose of dimensioning is to provide a clear and complete description of an object. A complete set of dimensions will permit only one interpretation needed to construct the part. In some cases, engineering drawing becomes meaningless without dimensioning. Maintaining scale only does not make a drawing sufficient for manufacturer. By direct measurement from drawing according to the scale is very laborious, time-consuming and such a part cannot be manufactured accurately. In general dimensioning system provides following information

- ✓ Sizes and locations of features
- ✓ Material's type
- ✓ Number required
- ✓ Kind of surface finish
- ✓ Manufacturing process
- ✓ Size and geometric tolerance

5.2 General Conditions for Dimensioning

- ✓ **Accuracy:** correct values must be given.
- ✓ **Clearness:** dimensions must be placed in appropriate positions.
- ✓ **Completeness**: nothing must be left out, and nothing duplicated.
- ✓ **Readability**: the appropriate line quality must be used for legibility.

5.3 Elements of Dimension System

- ✓ Extension lines
- ✓ Dimension lines
- ✓ Arrowheads
- ✓ Leaders
- ✓ Texts, numbers and symbols.

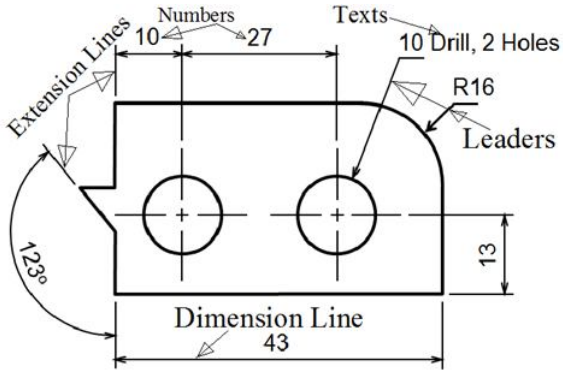

Fig. 5.1 Dimensioning Elements

5.4 Rules for Dimensioning

5.4.1 General Rules for Dimensioning

- ✓ Dimensioning should be given within the extent of the view in general.
- ✓ Dimensioning should not be duplicated in other view.
- ✓ No subtraction or addition should be required to define or locate a feature.
- ✓ Dimensioning should be inserted on relatively larger available view to make it clear.
- ✓ One system of dimensions either unidirectional or aligned has to be used throughout the drawing.
- ✓ Dimensioning to the hidden lines should be avoided, in general.
- ✓ Dimensioning should be made on the view, which represents the shape of the part best.
- ✓ A zero must be placed before decimal point.

5.4.2 Rules of Extension Lines

Extension lines are the lines that indicate the point or line or space on the drawing to which dimension is being applied. Following conditions should be maintained while inserting an extension line:

- ✓ A gap of 1mm has to be kept between extension line and visible line.
- ✓ An extension line should be extended about 3mm from the outmost dimension line.
- ✓ Extension lines may cross each other without break.
- ✓ Center lines can be used as extension lines.
- ✓ Extension lines are drawn usually perpendicular to dimension lines. But for overcrowded drawing they can be drawn at an oblique angle as well.

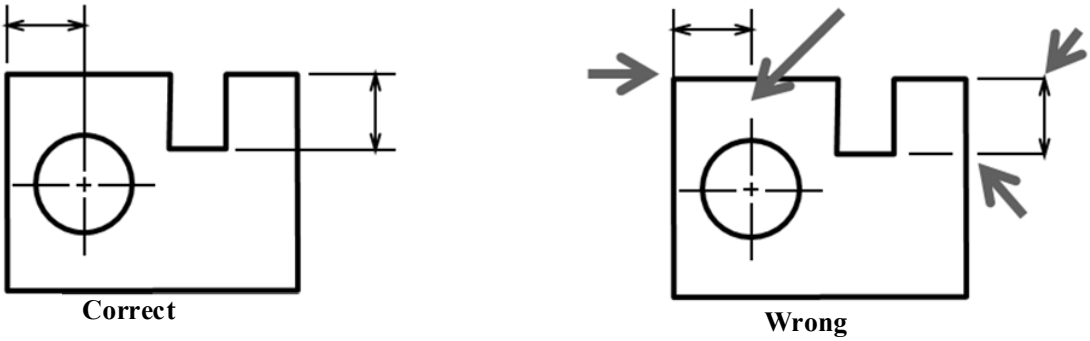

Fig. 5.2 Extension Lines in Proper Way

5.4.3 Rules of Dimension Lines

Dimension lines are the lines that show the dimensions of a specific portion indicated by extension lines. Following conditions should be maintained while inserting a dimension line:

- ✓ Dimension line should be approximately 10mm away from visible line.
- ✓ Spacing between consecutive parallel dimension lines may also be kept as 10mm.
- ✓ Dimension lines are broken near the middle to allow space for dimensions.
- ✓ As far as possible dimension lines should be placed outside the view.
- ✓ Dimension lines should not cross each other.
- ✓ Center lines should never be used as dimension lines.
- ✓ If space between extension lines is very short for inserting arrows, the arrows may be provided outside the extension lines.

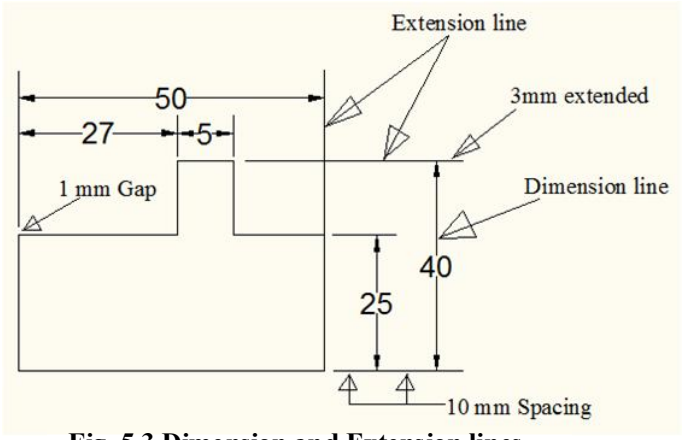

Fig. 5.3 Dimension and Extension lines

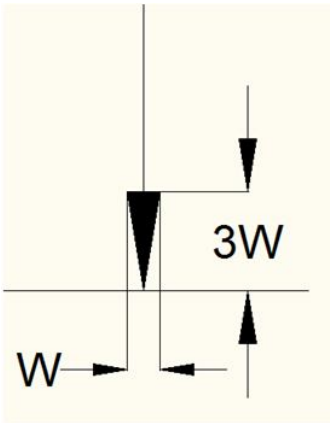

Fig. 5.4 Arrowhead

5.4.4 Rules of Arrowhead

Arrowheads are used at both ends of dimension lines and at the ends of leaders. They are usually drawn freehand. Following conditions should be maintained while inserting an arrowhead:

- ✓ As far as possible all arrowheads should be identical in shape and size throughout the drawing.
- ✓ An approximate ratio of the length to width of arrowhead as 3:1 should be maintained.
- ✓ Arrowheads must touch the line. It must not be either away from the line or cross the line.

5.4.5 Rules of Leaders

Leaders are used in engineering drawing for dimensioning of arcs, circles etc. They are also used to present note, symbols, item number or part number etc. Following conditions should be maintained while inserting a leader:

- ✓ A leader should always be inclined at an angle of 60^0 preferably and 45^0 occasionally.
- ✓ The length of horizontal bar should be 3mm.
- ✓ A leader should be terminated by either an arrowhead or a small dot of about 1.5mm diameter.
- ✓ Leaders should not be drawn bent unless necessary.
- ✓ Leaders should not cross each other, however, they may be drawn parallel to each other with a common horizontal bar.
- ✓ To direct a circle or an arc the leader should be so drawn, if it is imagined to extend it must pass through the center of the circle or the arc.
- ✓ All notes, symbols and dimensions in a leader need to be provided in horizontal direction.

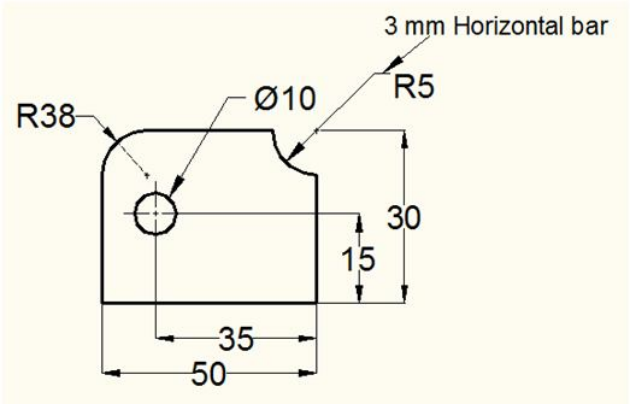

Fig. 5.5 Leaders

5.5 Direction of Dimensions

Direction of dimensions is chosen in either of the two systems:

A. **Unidirectional system:** All the dimensions are oriented to be read from the bottom of drawing. It is also known as horizontal system. This system is preferred to aligned system.

B. **Aligned system:** All the dimensions are oriented to be read from the bottom or right side of the drawing.

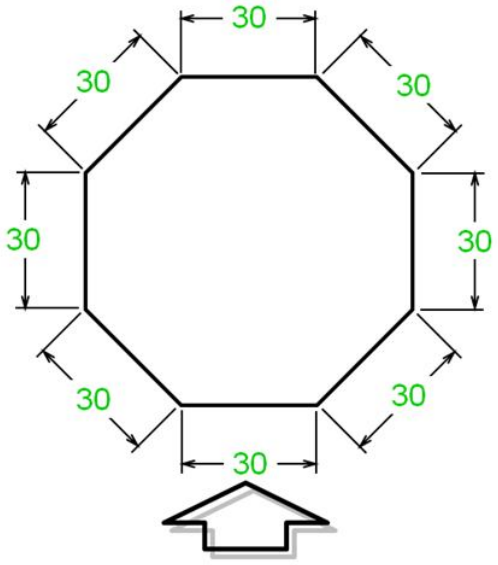

Fig. 5.6 Unidirectional System

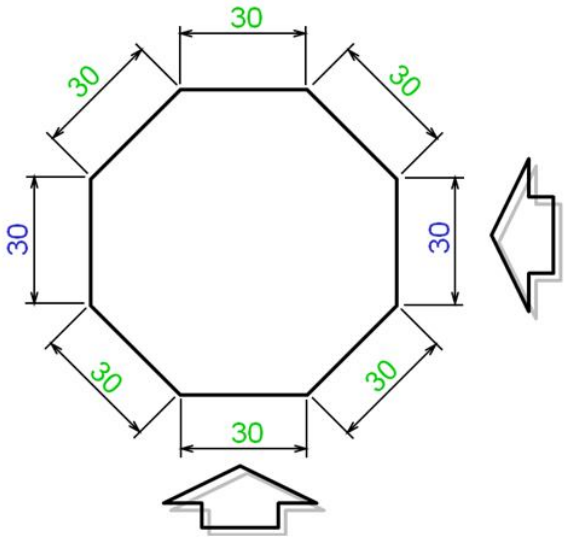

Fig. 5.7 Aligned System

5.6 Technique of Dimensioning

There are two basic steps in dimensioning objects, regardless of the type of object.

- ✓ **Step 1**: Apply the size dimensions. These are dimensions which indicate the overall size of the object and the various features which make up the object.
- ✓ **Step 2:** Apply the locational dimensions. Locational dimensions are dimensions which locate various features of an object from some specified datum or surface. Figure 9-29 gives examples of size and location dimensions.

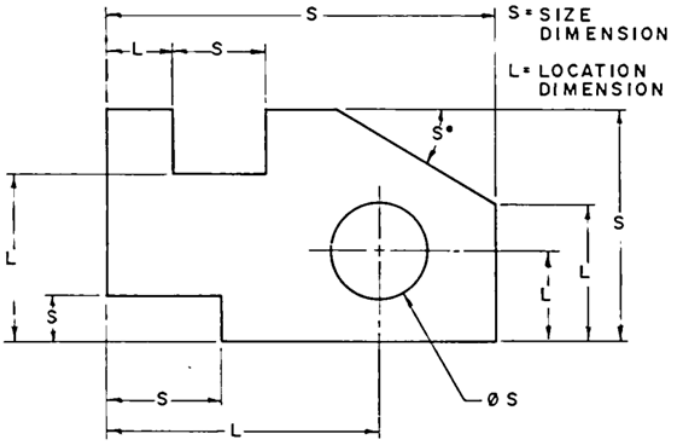

Fig. 5.8 Size and Location Dimension

5.7 Dimensioning in Limited Space

If space between the extension lines is too small to insert the dimension digits, they may be provided al left or right side of extension lines. Sometimes the space may be even too small to insert arrows, in such case dimensions as well as arrows can be provided on outside of the extension lines as shown in Fig. 5.9.

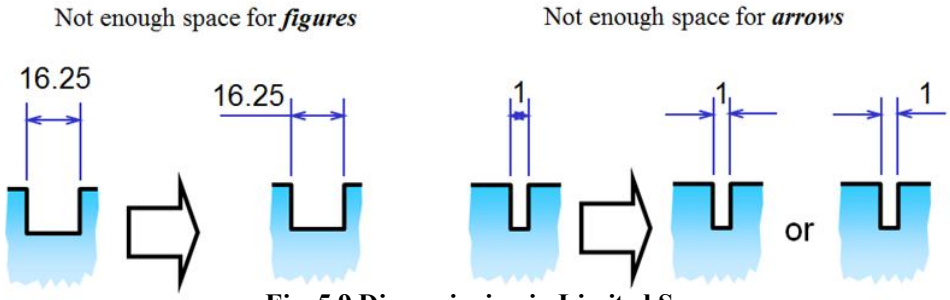

Fig. 5.9 Dimensioning in Limited Space

If the space is very limited for inserting dimension lines, the portion to be dimensioned are enlarged for clear dimensioning. Sometimes smaller circular dots are used in place of arrowhead for space limitation. Fig. 5.10 shows such example.

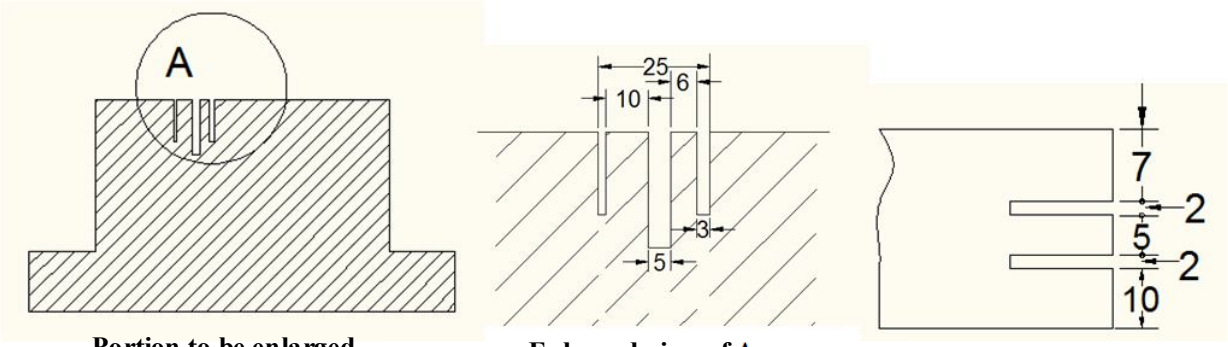

Portion to be enlarged **Enlarged view of A** **Use of small dot**

Fig. 5.10 Dimensioning in Limited Space

5.8 Dimensioning of Angles

Angles are normally written in degrees, minutes, and seconds. The symbols used to depict degrees, minutes, and seconds are also shown in this figure. Angular measurements may also be stated in decimal form. This is particularly advantageous when they must be entered into an electronic digital calculator. The key to converting angular measurements to decimal form is in knowing that each degree contains 60 minutes, and each minute contains 60 seconds.

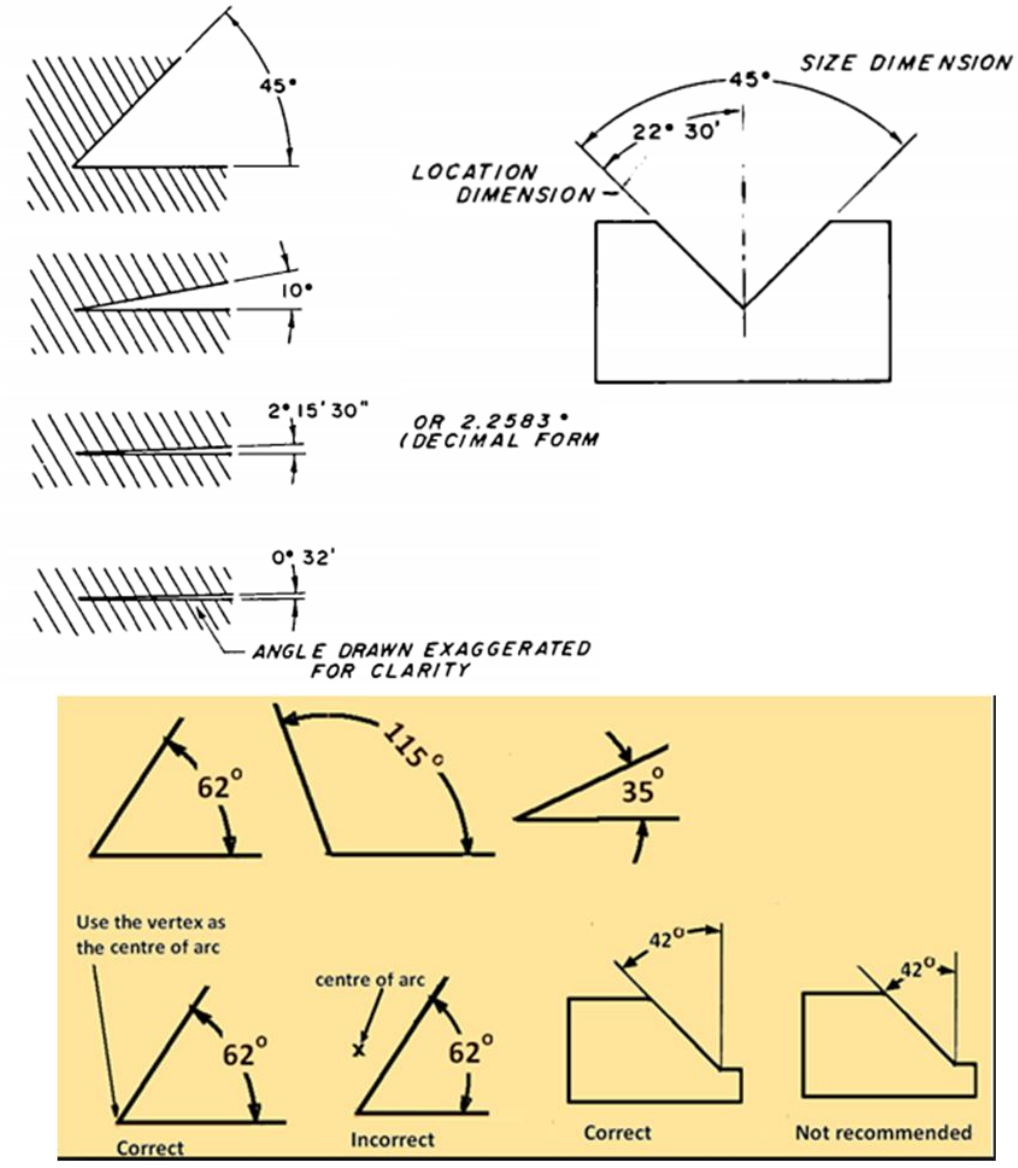

Fig. 5.11 Dimensioning of Angles

5.9 Dimensioning of Arcs

The dimension figure and the arrowhead should be inside the arc, where there is sufficient space. If space is limited then leaders can be used comfortably.

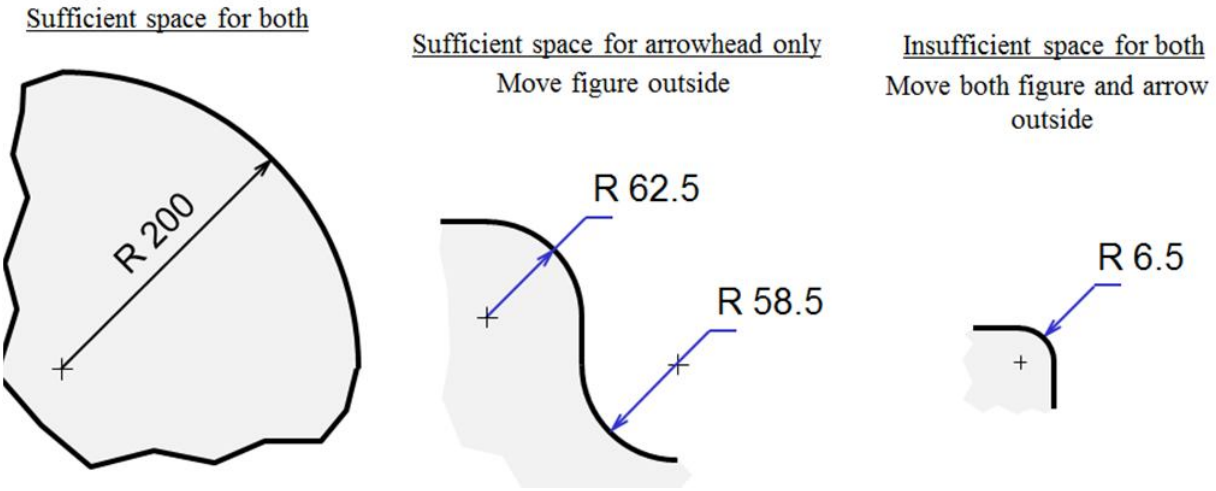

Fig. 5.12 Dimensioning of Arc

5.10 Dimensioning of Chord Length, Arc Length and Angle

Chords, arcs, and angles are dimensioned in a similar manner. The difference is:

- ✓ When dimensioning a chord length, the dimension line should be perpendicular and the extension lines parallel to the chord.
- ✓ When dimensioning an arc length, the dimension line runs concurrent with the arc curve, but the extension lines are either vertical or horizontal. An arc symbol is placed above the dimension.
- ✓ When dimensioning an angle, the extension lines extend from the sides forming the angle, and the dimension line forms an arc.

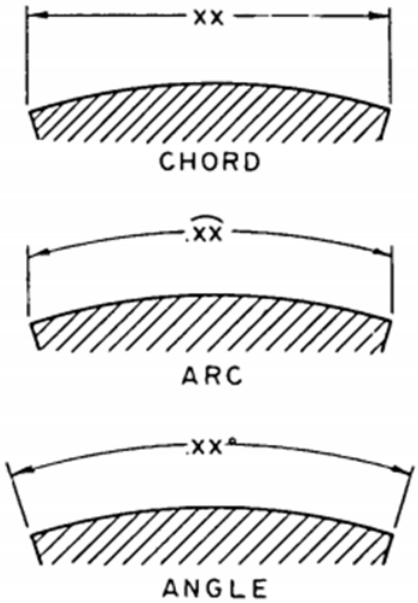

Fig. 5.13 Difference among the Dimensioning Of Chord Length, Arc Length and Angle

5.11 Dimensioning of Round Holes

- ✓ Round holes are dimensioned in the view in which they appear as circles.
- ✓ Smaller holes may be dimensioned using a leader which points toward the center of the hole in which the note gives the diameter, or extension lines may be drawn from the circle with a dimension that also indicates the diameter.
- ✓ Larger circles are dimensioned with a dimension line drawn across the circle through its center at an angle with the diameter dimension shown.
- ✓ It is important when dimensioning holes to call off the diameter, not the radius.

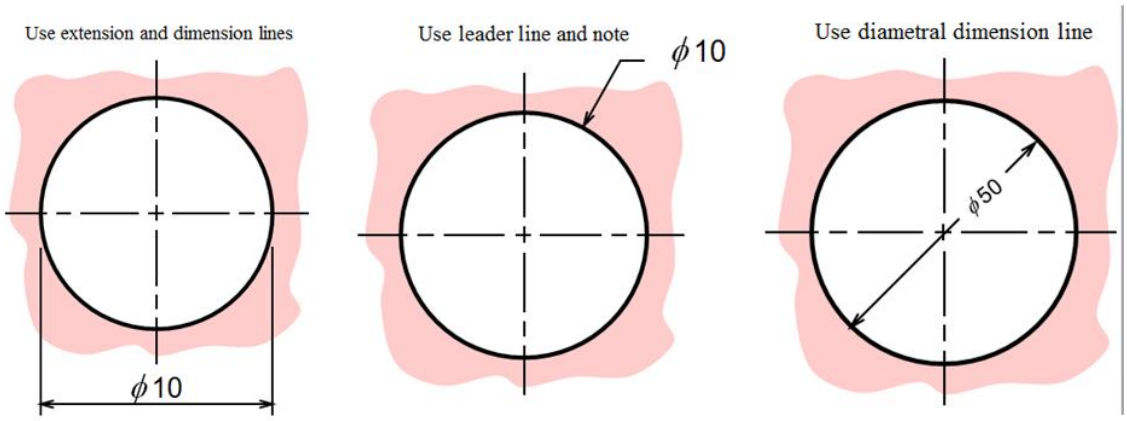

Fig. 5.14 Dimensioning of Circular Holes

5.12 Dimensioning of Blind Holes

It is usual practice to use leader line and local note to specify **diameter** and **hole's depth** in the circular view.

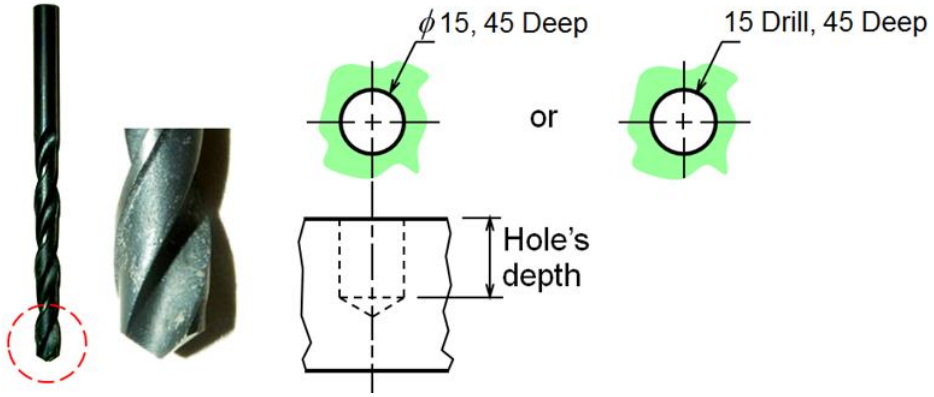

Fig. 5.15 Dimensioning of Blind Holes

5.13 Dimensioning of Chamfer

It is usual practice to use leader line and note to indicate **linear distance** and **angle** of the chamfer.

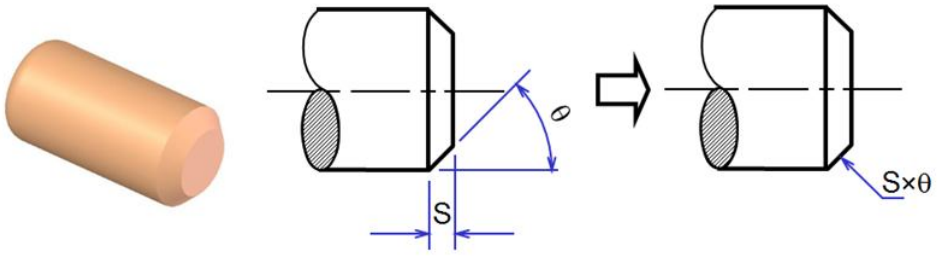

Fig. 5.16 Dimensioning of a Chamfer

5.14 Common Mistakes in Dimensioning

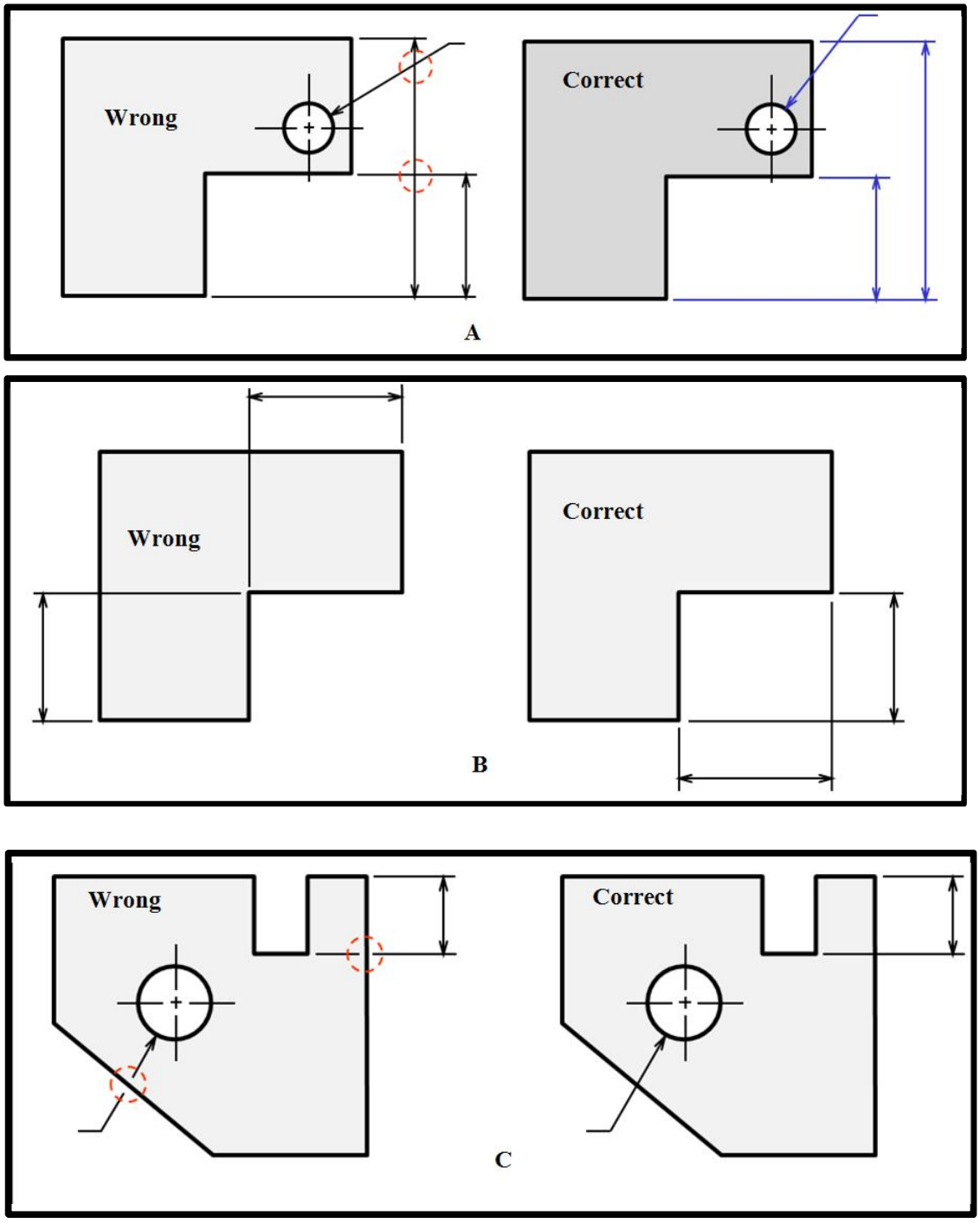

Fig. 5.17 Common Mistakes in Dimensioning (Contd.)

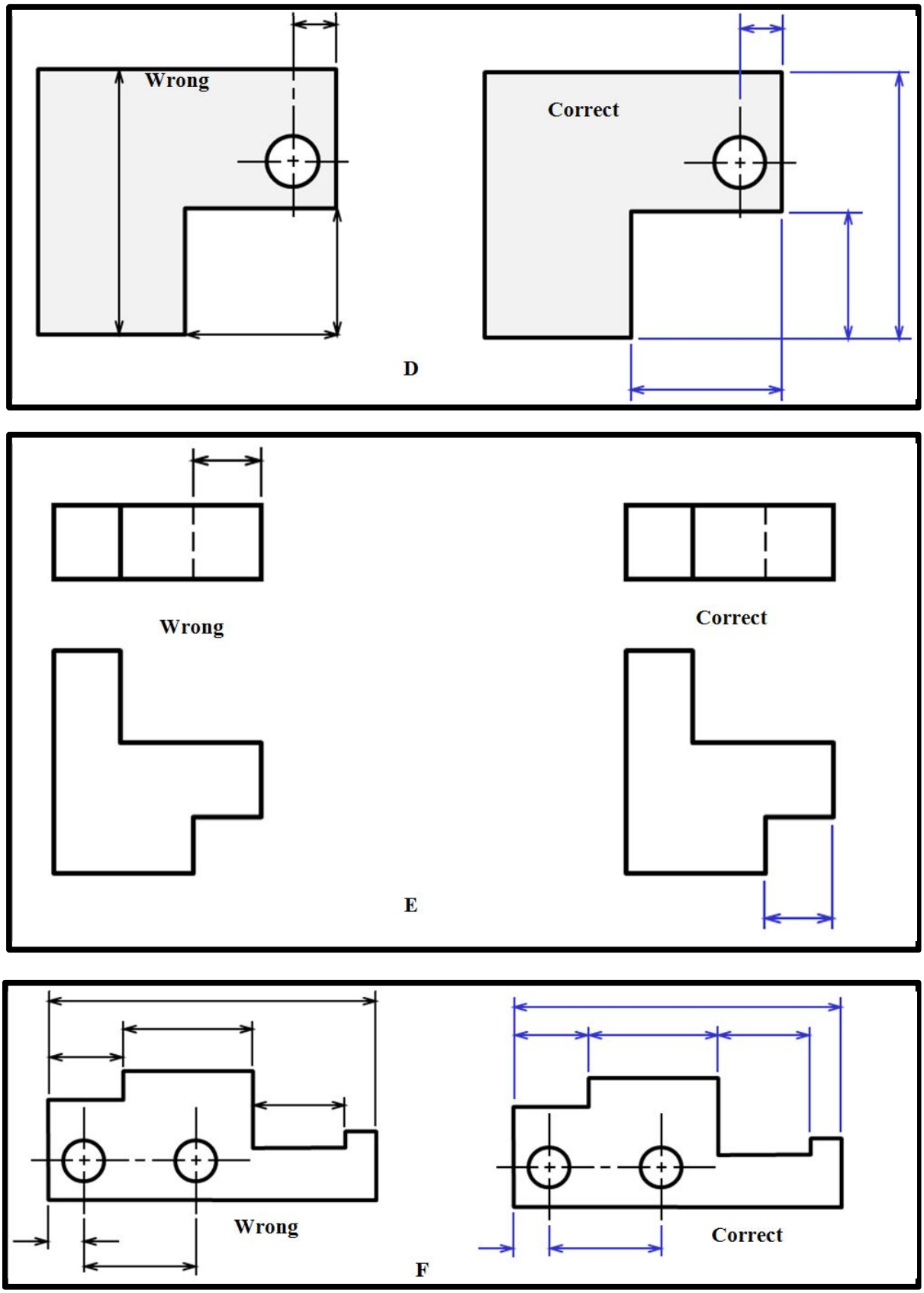

Fig. 5.17 Common Mistakes in Dimensioning (Contd.)

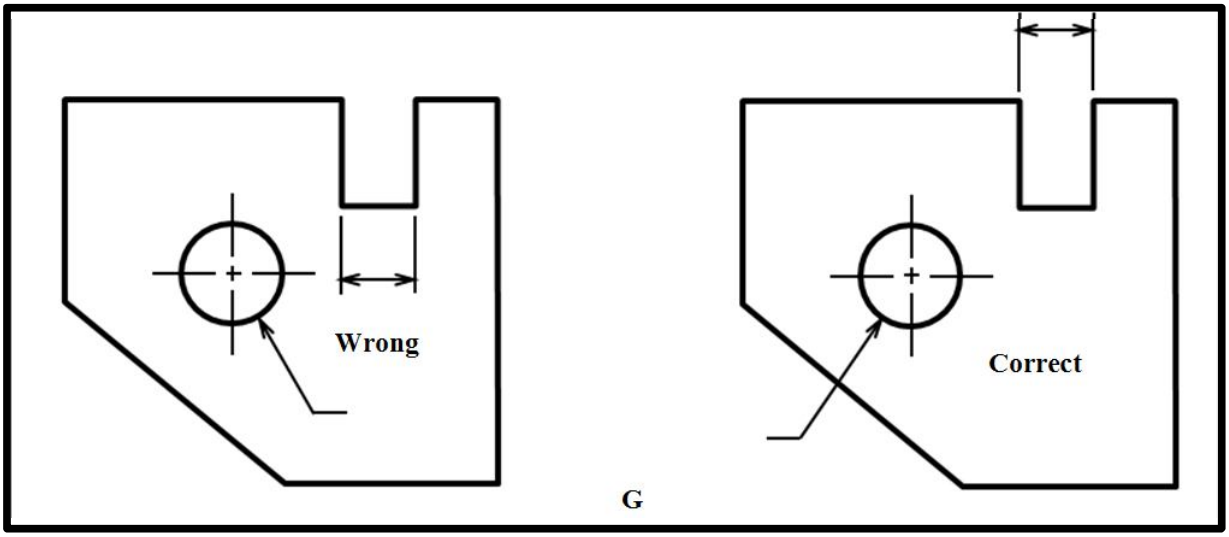

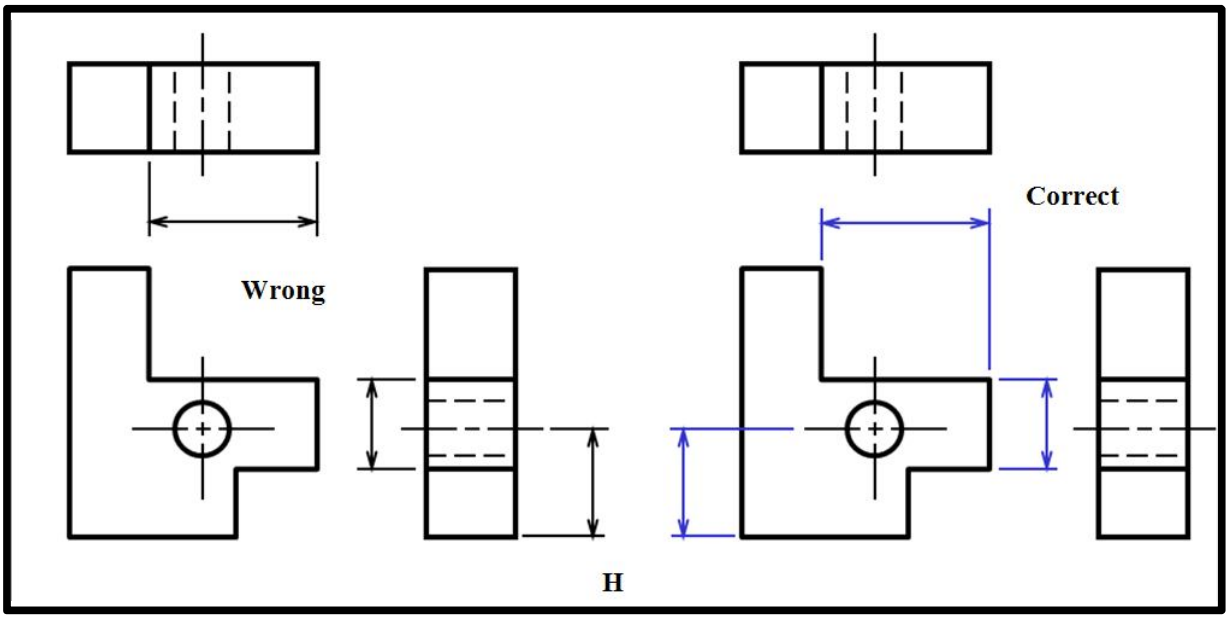

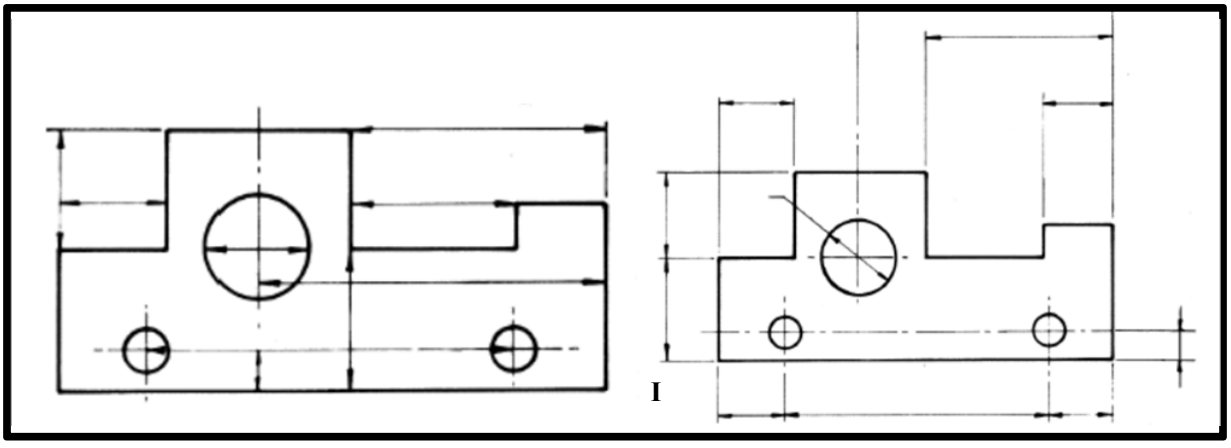

Fig. 5.17 Common Mistakes in Dimensioning (Contd.)

5.15 Worked-out Examples of Dimensioning

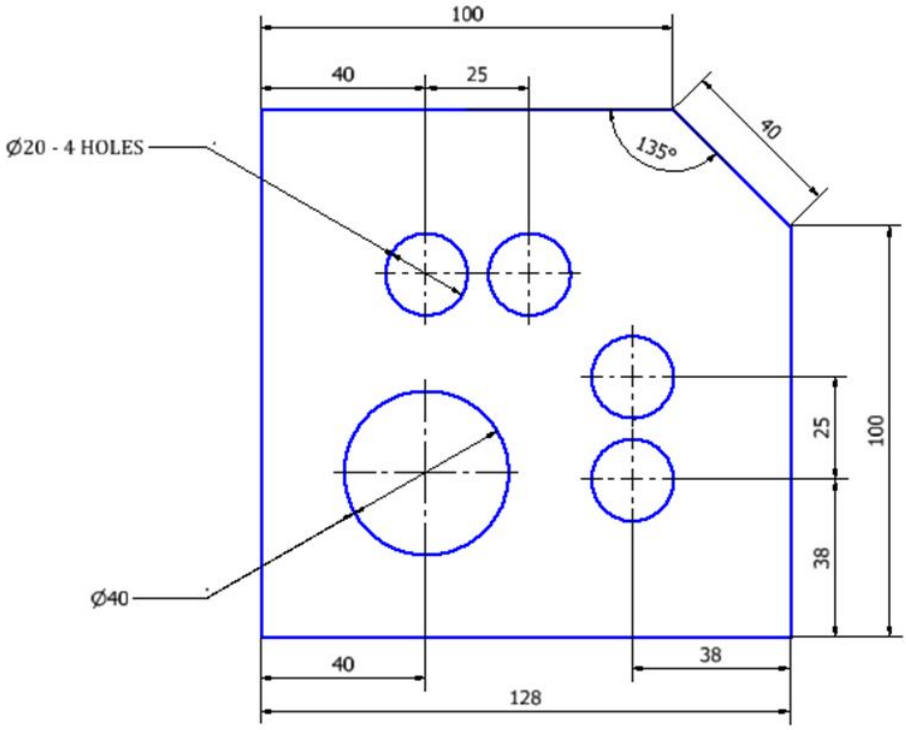

(A)

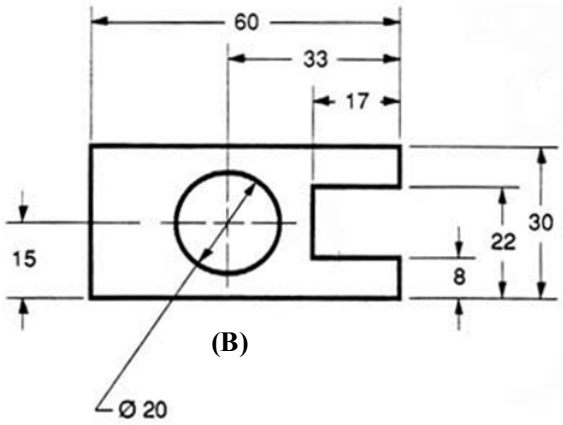

(B)

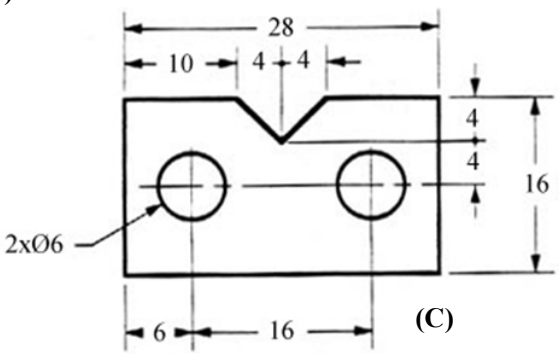

(C)

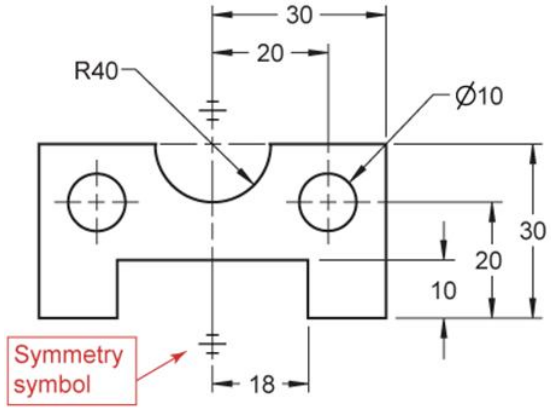

(D)

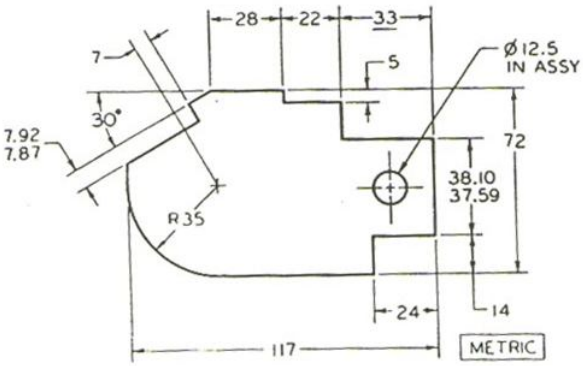

(E)

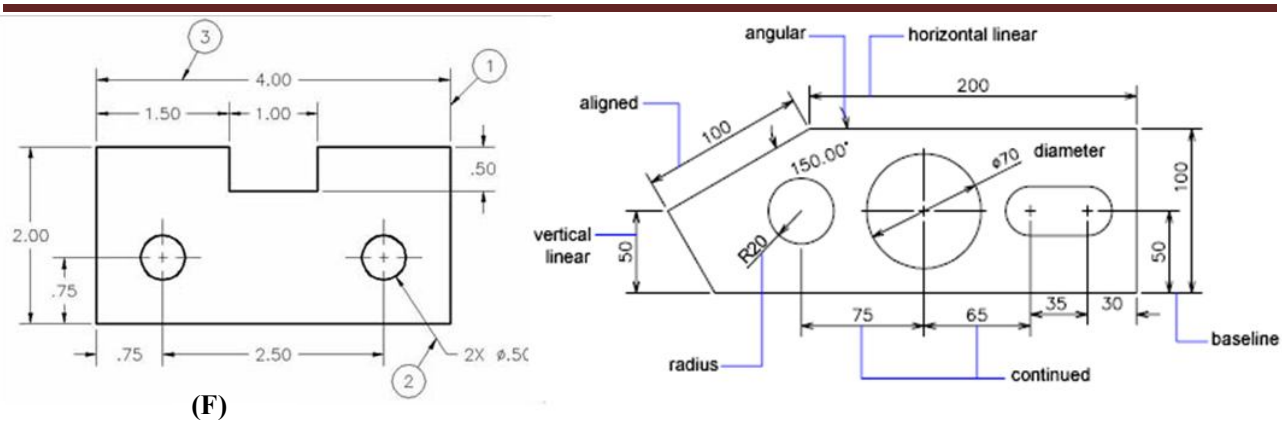
3
4.00
1
1.50
1.00
.50
2.00
.75
.75
2.50
2
angular
horizontal linear
200
aligned
100
150.00°
ø70
diameter
100
vertical
linear
50
R20
50
75
65
35
30
baseline
radius
continued

(F)

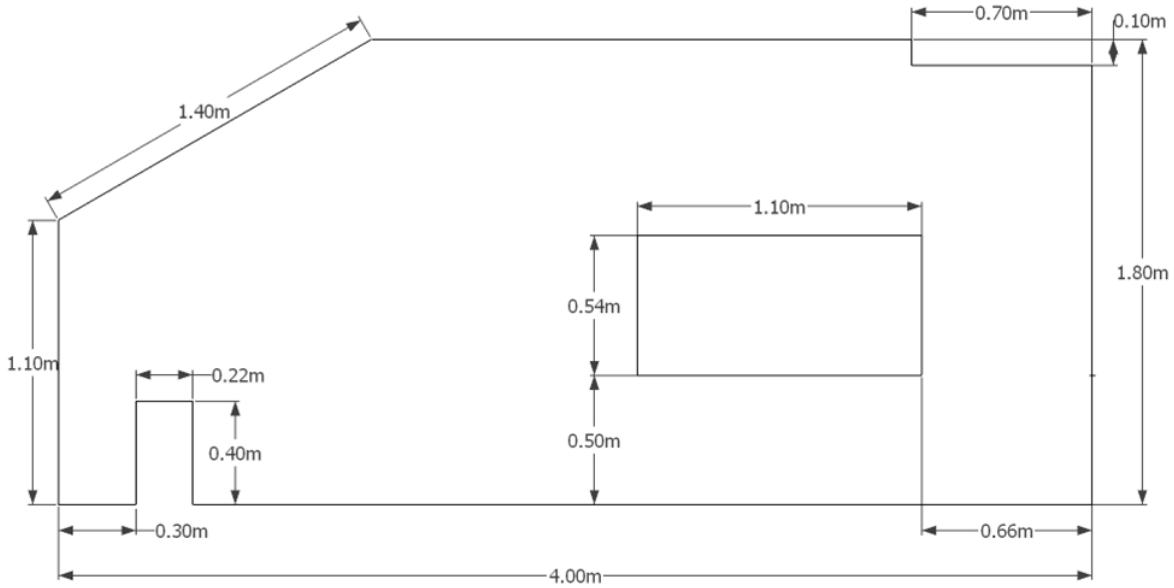
0.70m
0.10m
1.40m
1.10m
1.80m
0.54m
1.10m
0.22m
0.40m
0.50m
0.30m
0.66m
4.00m

(H)

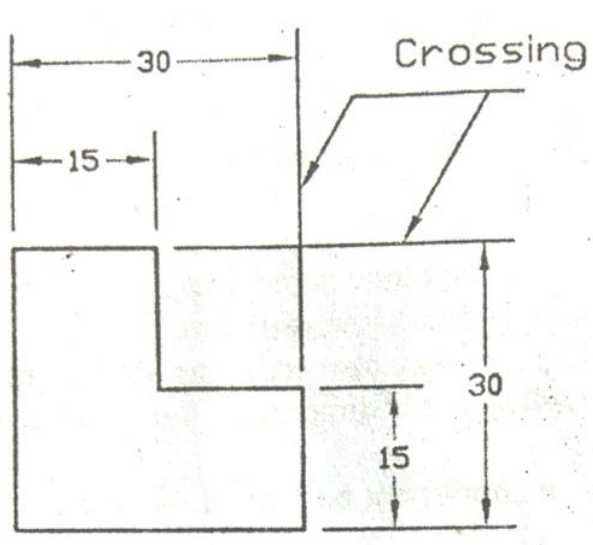
30
Crossing
15
30
15

(I)

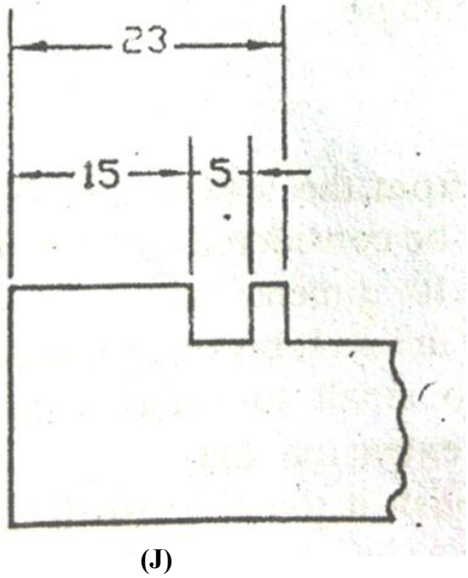
23
15
5

(J)

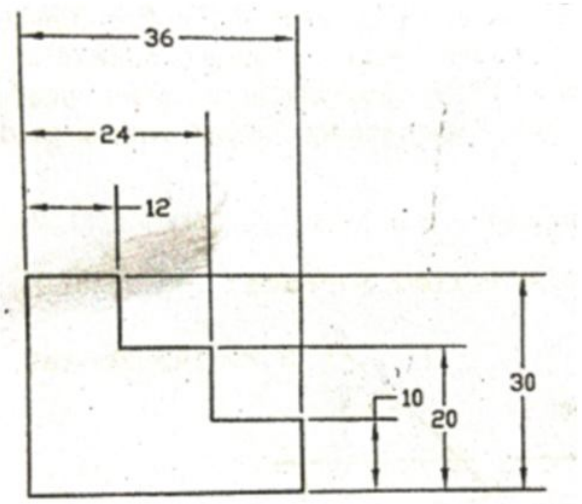
36
24
12
10
20
30

(K)

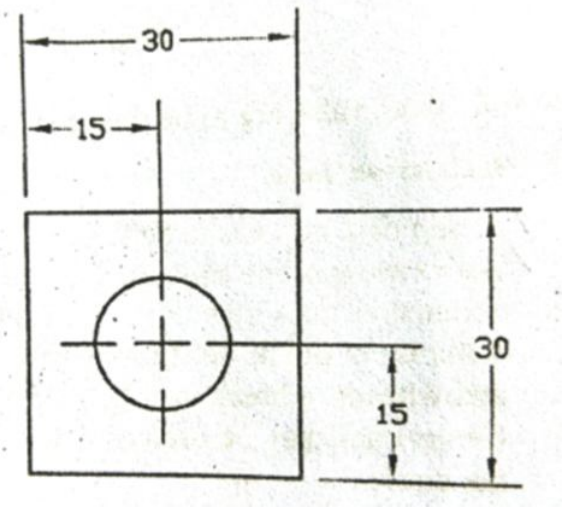
30
15
30
15

(L)

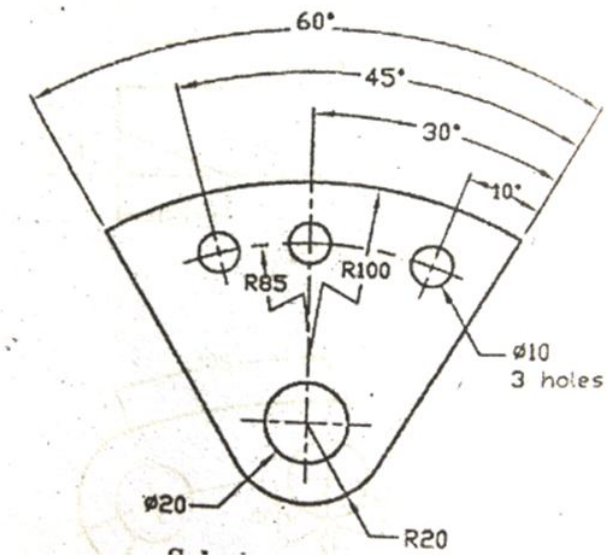
60°
45°
30°
10°
R85
R100
ø10
3 holes
ø20
R20

(M)

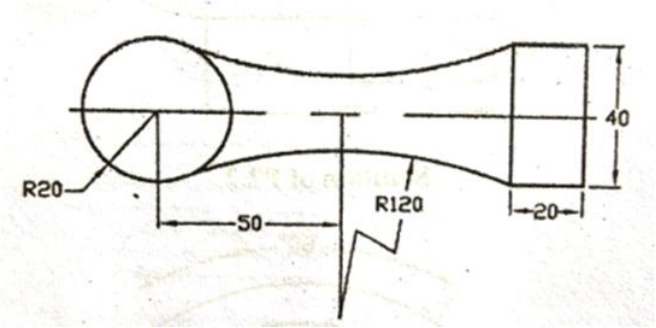
40
R20
50
R120
20

(N)

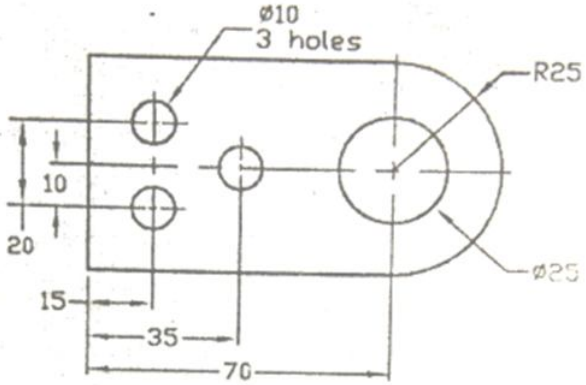
ø10
3 holes
R25
10
20
15
35
70
ø25

(O)

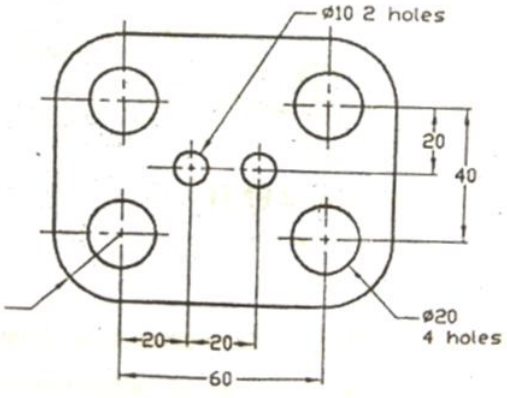
ø10 2 holes
20
40
ø20
4 holes
20
20
60

(P)

Exercise and Assignments:

Complete Dimensioning of the figures below:

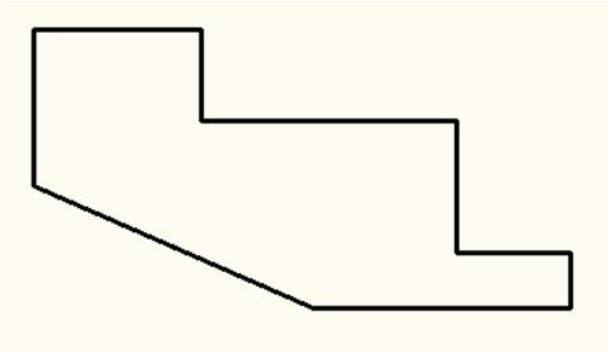

(1)

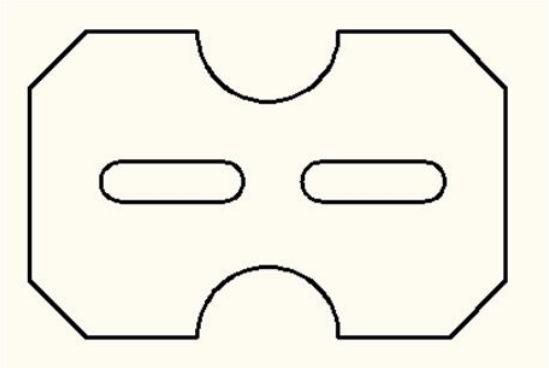

(2)

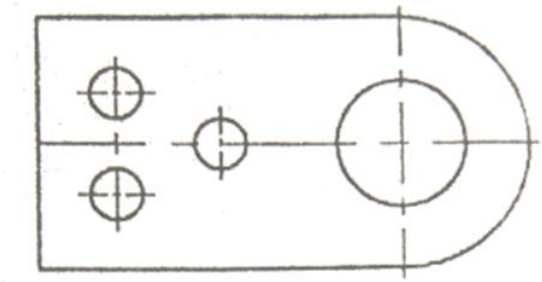

(3)

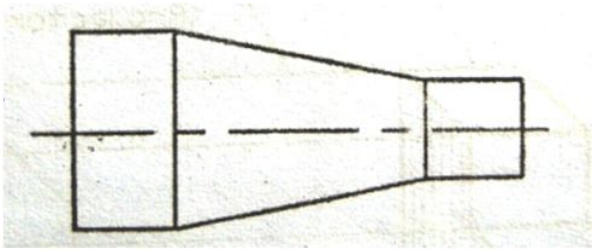

(4)

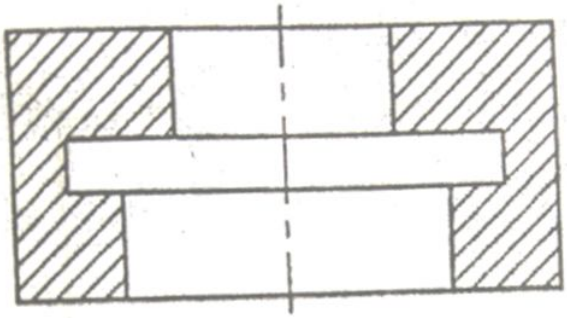

(5)

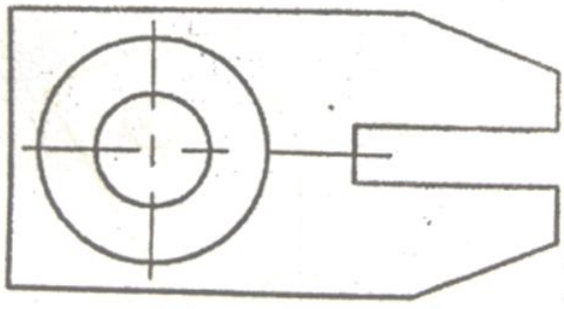

(6)

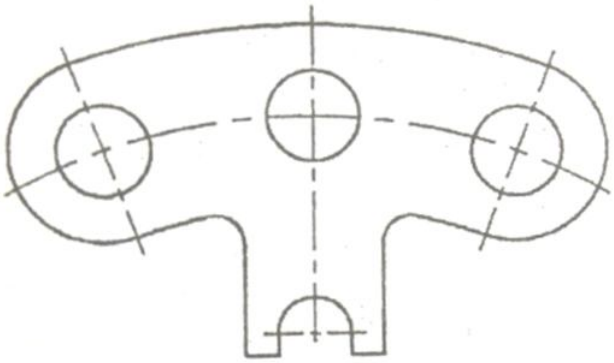

(7)

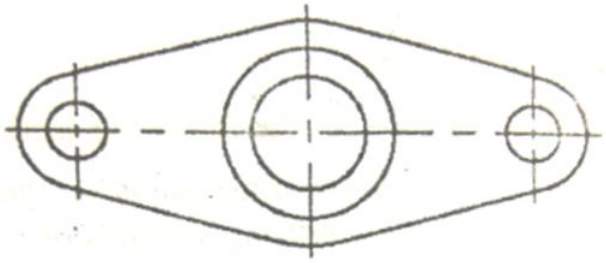

(8)

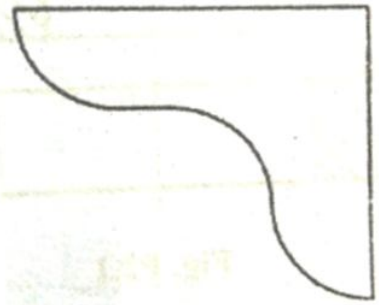

(9)

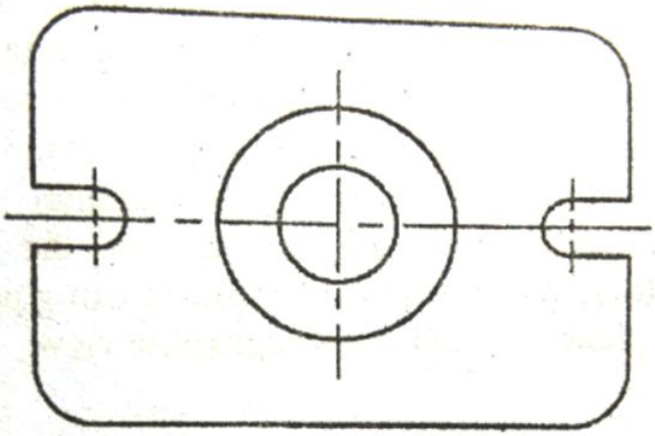

(10)

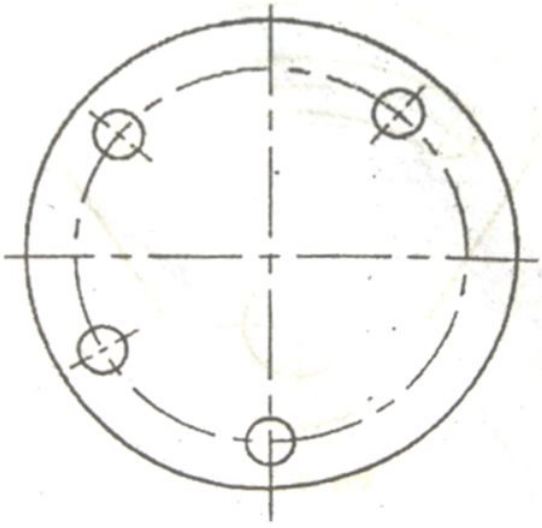

(11)

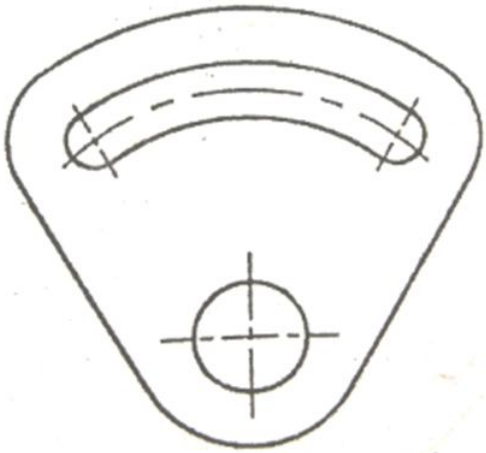

(12)

Review Questions

1. Why have you studied dimensioning?
2. Which information are provided in dimensioning system?
3. What are the conditions for a good dimension system?
4. Name the elements of dimensioning system.
5. What are the rules that must be followed while dimensioning?
6. What is the purpose of extension line and what are the rules to be followed for extension line?
7. What is the purpose of dimension line and what are the rules to be followed for dimension line?
8. What is the purpose of leaders and what are the rules to be followed for leaders?
9. What are the uses of arrowheads in dimensioning and what are the rules to be followed for arrowheads?
10. What is the proportion of width and length of an arrowhead?
11. Draw a square out scribing a circle and complete dimensioning.
12. What is the difference between aligned and unidirectional dimensioning? Give examples.
13. What will you do when the space between extension lines is too small to accommodate the dimension line with text at its middle?
14. What will you do when the space between extension lines is too small to accommodate the dimension line with arrows?
15. What will you do when the feature is too small to make the dimension visible?
16. What are the different ways to show dimension of an arc/circle?
17. What is the difference of dimensioning of chord, arc and angle? Give example.
18. Draw a circular hole of 2cm deep and give dimensions to it.

CHAPTER 6
SCALES

Objectives

Objectives of studying this chapter are:

- To learn to construct different types of scale.
- To learn to produce an enlarged or reduced drawing.
- To learn to make measurements using scales drawn in maps or drawings.

6.1 Scale

The proportion by which we either reduce or increase the actual size of the object on a drawing is known as scale.

It is not possible always to make drawings of an object to its actual size as the extent of drawing paper is limited and also sometimes the objects are too small to make it clearly understandable by drawing its actual size in drawing paper. Scale is the technique by which one can represent an object comfortably as well as precisely within the extent of drawing paper.

In other words, a scale is a measuring stick, graduated with different divisions to represent the corresponding actual distance according to some proportion. Numerically scales indicate the relation between the dimensions on drawing and actual dimensions of the objects.

6.2 Uses of scale

- ✓ To prepare reduced or enlarged size drawings.
- ✓ To set off dimensions.
- ✓ To measure distances directly.

6.3 Sizes of Scales

- ✓ Full size scale
- ✓ Reducing scale
- ✓ Enlarging scale

Full Size Scale

The scale in which the actual measurements of the object are drawn to the same size on the drawing is known as full size scale. It is represented as 1:1 scale. If possible, drawing should be done in full scale.

Reducing Scale

The scale in which the actual measurements of the object are reduced to some proportion is known as reducing scale. The standard formats of reducing proportions are:

1:2 - drawing made to one-half of the actual size
1:5 - drawing made to one-fifth of the actual size
1:10 - drawing made to one-tenth of the actual size
1:50 - drawing made to one-fiftieth of the actual size
1:100 - drawing made to one-hundredth of the actual size

Enlarging Scale

The scale in which the actual measurements of the object are increased to some proportion is known as reducing scale. The standard formats of enlarging proportions are:

2:1 - drawing made to twice the actual size
5:1 - drawing made to five times the actual size
10: - drawing made to ten times the actual size

6.4 Classification of Scales

- ✓ Plain Scales
- ✓ Diagonal Scales
- ✓ Comparative Scales
- ✓ Vernier Scales
- ✓ Chord Scales

The first two type (plain and diagonal) of scales are usually used in engineering drawings.

6.4.1 Plain Scale

The scale that can measure one main unit and one sub-unit of the main unit or up to a fraction of 1st decimal point of the main unit is known to be a plain scale. It is simply a line divided into a number of equal parts and the 1st part is further sub-divided into small parts.

Kilometers and Hectometers, Meters and Decimeters, Meters and 1/10th of Meters etc. can be measured using plain scales.

6.4.2 Diagonal Scale

The scale that can measure one main unit and two sub-units of the main unit or up to a fraction of 2nd decimal point of the main unit is known to be a diagonal scale. It is so named because the 2nd sub-unit or 2nd decimal of main unit is obtained by the principle of diagonal division.

Kilometers-Hectometers-Decameters, Decameters-Meters-Decimeters, Meters-1/10th of Meters- 1/100th of Meters etc. can be measured using diagonal scales.

Table 6.1 Difference between Plain Scale and Diagonal Scale

Plain Scale	Diagonal Scale
It can measure one main unit and one sub-units of the main unit	It can measure one main unit and two sub-units of the main unit
It can measure up to a fraction of 1st decimal point of the main unit.	It can measure up to a fraction of 2nd decimal point of the main unit.
Scale is constructed by simply dividing the line longitudinally.	Scale is constructed by dividing the line longitudinally as well as vertically and diagonally.

6.4.3 Comparative Scale

When the given scale of a plan reads a certain measure and it is required to construct a new scale for the same plan to read in some other measures, the new scale is called comparative scale or corresponding scale.

For example let us consider a plan drawn in inch units and scale provided with drawing can measure in feet and inch. If we draw another scale taking same R.F. that can measure in feet, inch and 1/8th of inch it will be a comparative scale. Also if we draw another scale that can measure in cm and mm with same R.F. it will also be a comparative scale.

6.4.4 Vernier Scale

It is device for measuring fractional parts of the smallest division of the main scale. It consists of a fixed main scale and a movable vernier scale. The vernier part is graduated in "n" number of divisions in such a way that it coincides with "n-1" number of smallest divisions of main scale.

6.4.5 Chord Scale

The scale which is used to make or to measure angles of any magnitude is known as chord scale. This scale is usually marked on a rectangular protractor.

6.5 Necessity of Construction of Scale on Drawing

In most of the cases the distances in a drawing is found to be different than the corresponding actual distance. Therefore, to get the actual measurements, it is a must to know the proportion using which the drawing is prepared. Sometimes the drawing may need to be prepared to an odd proportion (like 1:2.7 or 13.2:1) for which a physical scale is not available. In such case individual scale construction is required for that specific drawing. It is often found helpful and convenient to construct and draw the corresponding scale on the drawing than mentioning the proportion in language. On the other hand if a drawing is to be used after decades, the paper may shrink or

expand by absorbing or leaving moisture due to temperature effect. Taking measurements from such a drawing using the proportion mentioned will give some inaccurate result. But if a scale is constructed an drawn during the preparation of 1st time, the drawn scale will also shrink or expand in the same proportion to the drawing. Thus if one take measurements with the help of the drawn scale, accurate measurements will be obtained.

6.6 Information Necessary for Construction of a Scale

Following are the necessary information required for construction of a scale:

- ✓ The representative fraction (R.F.) of the scale.
- ✓ The unit or units to be presented.
- ✓ The maximum length to be measured.

6.6.1 The Representative Fraction (R.F.) or Scale Factor (S.F.)

The ratio of the distance on drawing paper of an object to the corresponding actual distance of the object is known as the representative fraction (R.F.) or the scale factor (S.F.). It is to be remembered that for finding RF the distances used for calculation must be in same unit. And being a ratio of same units, R.F. itself has no unit. Mathematically,

$$\boldsymbol{R.F.} = \frac{\boldsymbol{Distance\ of\ object\ on\ drawing\ sheet}}{\boldsymbol{Corresponding\ actual\ distance\ of\ the\ object}} \qquad [\boldsymbol{In\ same\ unit}]$$

6.6.1.1 Worked out Examples of R.F. Calculation

Example 6.1: In a certain map, 2.5 centimeters of measured length represents 5 hectometers of actual distance. Calculate R.F. for the scale of this map.

Solution:

Representative Fraction of the scale for this map,

$$R.F. = \frac{2.5}{5\times10\times10\times10\times10} = \frac{1}{20000} \quad or \quad 1:20000$$

Example 6.2: To draw a microscopic element of a machine part, it is to be enlarged in drawing such a manner that one-fifth of one millimeter is to be represented by 1.5 meters. Find out RF of the scale for this drawing.

Solution:

Representative Fraction of the scale,

$$R.F. = \frac{1.5\times10\times10\times10}{\frac{1}{5}} = 7500 \quad or \quad 7500:1$$

Example 6.3: A scale is to be constructed for a drawing of a plot such that 100 square feet of area is to be represented by 1 square inch. What will be the R.F. of this scale?

Solution:

Here 1 sq. inch represents 100 sq.ft. or we can write $1\ inch^2 \approx 100\ ft^2$

Taking under root on both sides, we get

$$\sqrt{1\ inch^2} \approx \sqrt{100\ ft^2}$$

$$\therefore 1\ inch \approx 10\ ft$$

$$Now, \quad R.F. = \frac{1}{10\times12} = \frac{1}{120} \quad or \quad 1:120$$

6.6.2 Units of Measurement

It is modern practice to use metric system of units in engineering drawing. However, sometimes British system is also used. It is important to have clear understanding about unit conversion in both system. Table 6.2 to Table 6.7 presents the units of measurements, their symbols and conversions.

Table 6.2 Metric Units for Linear Measurement

10 millimeters (mm)	= 1 centimeter (cm)
10 centimeters (cm)	= 1 decimeter (dm)
10 decimeters (dm)	= 1 meter (m)
10 meters (m)	= 1 decameter (dam)
10 decameters (dam)	= 1 hectometer (hm)
10 hectometers (hm)	= 1 kilometer (km)

Table 6.3 British Units for Linear Measurement

12 inches	= 1 foot
3 feet	= 1 yard
220 yards	= 1 furlong
8 furlong	= 1 mile

Table 6.4 Metric Units for Area Measurement

100 square millimeters (mm^2)	= 1 square centimeter (cm^2)
100 square centimeters (cm^2)	= 1 square decimeter (dm^2)
100 square decimeters (dm^2)	= 1 square meter (m^2)
100 square meters (m^2)	= 1 acre (a)
100 acres (a)	= 1 hectare
100 hectares	= 1 square kilometer (km^2)

Table 6.5 British Units for Area Measurement

144 square inches	= 1 square foot
9 square feet	= 1 square yard
4840 square yards	= 1 acre
640 acres	= 1 square mile

Table 6.6 Metric Units for Volumetric Measurement

1000 cubic millimeters (mm^3)	= 1 cubic centimeter (cm^3)
1000 cubic centimeters (cm^3)	= 1 cubic decimeter (dm^3)
1000 cubic decimeters (dm^3)	= 1 cubic meter (m^3)

Table 6.7 British Units for Volumetric Measurement

1728 cubic inches	= 1 cubic foot
27 cubic feet	= 1 cubic yard

6.7 Construction of Plain Scale

Following are the steps for constructing a plain scale

- ✓ Find out the R.F., if not given directly.
- ✓ Find out the length of scale

$$= R.F. \times Actual\ length\ of\ object\ or\ Maximum\ length\ to\ be\ measured$$

[Note: If length of object or maximum length to be measured is not mentioned in problem, for convenience, take the length of scale about 15 cm or 6 inches]

- ✓ Draw a straight line, preferably horizontal, of required length as found in previous step.
- ✓ Divide the line into a number of divisions relating to the length of object and maximum length to be measured such that one segment represents one major unit. Avoid fractions, consider the next integer value. For instance, if maximum length to be measured is 6.2 km, then number of divisions will be 7.
- ✓ Place mark 0 at the end of 1st main division (Remember, not at the starting point of 1st division) and mark the other divisions sequentially toward right as 1,2,3….. etc.
- ✓ Divide the 1st main division into a number of divisions such that each of these smallest division represents one sub-unit. For instance if the scale need to measure in feet and inches, number of minor divisions will be 12. On the other hand if the scale is to measure in centimeters and millimeters or in meters and 1/10th of meter number of divisions will be 10.
- ✓ Mark the sub-unit sequentially toward left as 1, 2, 3…… etc. or 0.1, 0.2, 0.3……. etc. If space is limited they can be marked after every 2 division like 0, 2,4,….. etc.
- ✓ Mention the R.F. of the scale below the figure.
- ✓ Mention the name of main unit and sub-unit either at below or at the respective ends of the scale.

6.7.1 Worked-out Examples of Plain Scale Construction

Example 6.4: Construct a plain scale to show kilometers and hectometers when 2.5 centimeters are equal to 1 kilometer and long enough to measure upto 5.7 kilometers. Find R.F. of the scale and indicate distances (i) 4 kilometers and 5 hectometers and (ii) 5.4 kilometers on the scale.

Solution:

$$R.F. = \frac{2.5}{1 \times 10 \times 10 \times 10 \times 10 \times 10} = \frac{1}{40000} \quad or \quad 1:40000$$

$$Length\ of\ Scale\ = R.F.\ \times Maximum\ length\ to\ measure$$

$$= \frac{1}{40000} \times 6\ km = \frac{1}{40000} \times 6 \times 1000 \times 100\ cm = 15\ cm$$

[To avoid fraction, maximum distance is take 6 km instead of 5.7 km]

Now a horizontal line 15 cm long is drawn and is divided into 6 equal parts. From left staring 0 at 2nd division major units are marked sequentially toward right as 0, 1, 2, 3, 4 and 5. The 1st division is further divided into 10 divisions and starting at 0 mark placed earlier the sub-divisions are marked after every 2 division as 2, 4, 6, 8 and 10 toward left. R.F. and unit names are mentioned accordingly. Thus the scale is constructed and the required distances are indicated.

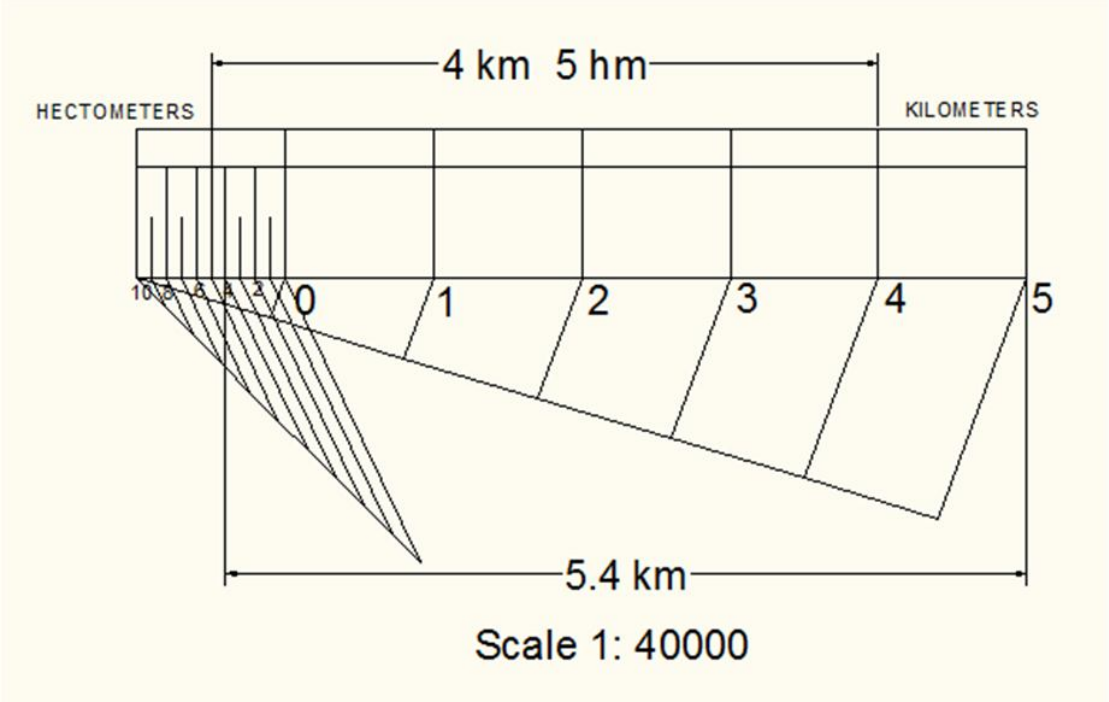

Example 6.5: A rectangular plot of land of area 64 square mile is represented on a certain map by area of 1 square inch. Draw a plain scale to show units of 10 miles and single miles. Find R.F. and mark a distance of 63 mile on this scale.

Solution: Given,

$$1\ inch^2 \approx 16\ mile^2$$

$$\sqrt{1\ inch^2} \approx \sqrt{64\ mile^2}$$

$$\therefore 1\ inch \approx 8\ miles$$

$$Now, \quad R.F. = \frac{1}{8 \times 1760 \times 3 \times 12} = \frac{1}{506880} \quad or \quad 1:506880$$

Here maximum distance to be measured is not given, but we need to ensure the measuring a distance of 63 mile. Thus we have to construct the scale for 70 miles of maximum distance.

$$Length\ of\ Scale = R.F. \times Maximum\ length\ to\ measure$$
$$= \frac{1}{506880} \times 70\ miles = \frac{1}{506880} \times 70 \times 1760 \times 3 \times 12\ inch = 8.75\ inch$$

Now a horizontal line 8.75 inch long is drawn and is divided into 7 equal parts. From left staring 0 at 2nd division major units are marked sequentially toward right as 0, 10, 20, 30, 40, 50 and 60. The 1st division is further divided into 10 divisions and starting at 0 mark placed earlier the sub-divisions are marked after every 2 division as 2, 4, 6, 8 and 10 toward left. R.F. and unit names are mentioned accordingly. Thus the scale is constructed and the required distances are indicated.

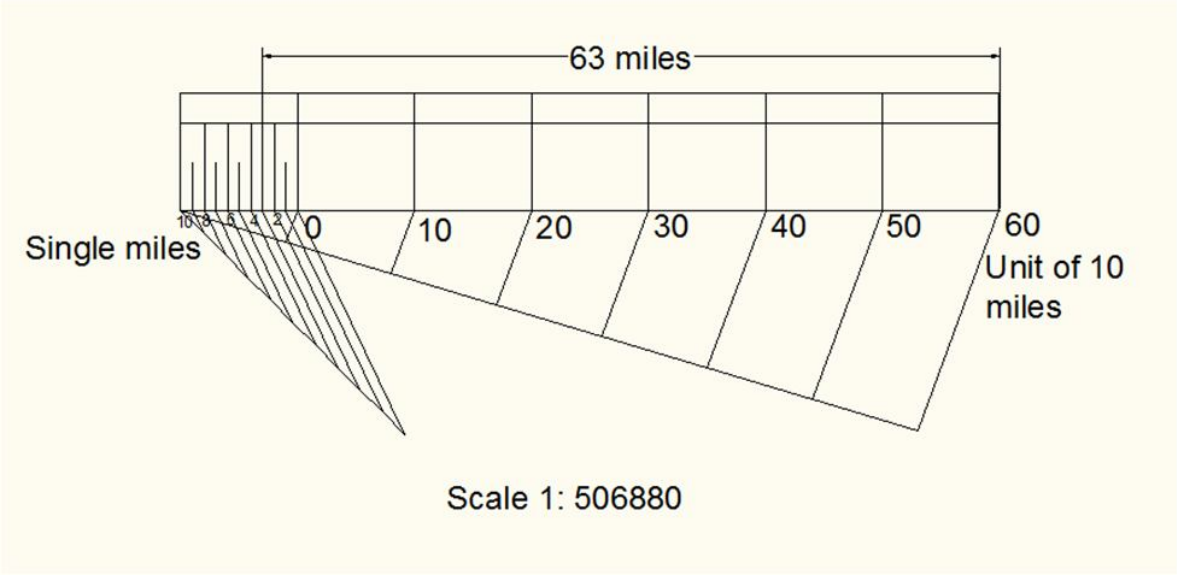

Example 6.6: A car is moving at a speed of 60 kmph. On a scale one centimeter represents one third of a kilometer. Construct the scale and show the distance travelled by the car in 3 minutes and 30 seconds. What is the R.F. of the scale?

Solution:

$$R.F. = \frac{1}{\frac{1}{3} \times 1000 \times 100} = \frac{1}{33333} \quad or \quad 1:33333$$

$$Speed\ of\ the\ car\ = 60kmph = 60\frac{km}{hr} = \frac{60}{60}\frac{km}{mt} = \frac{1km}{1mt}$$

$$Therefore, we\ get, \quad 1km \approx 1mt - - - - - - - - (1)$$

$$Also, Given, \quad \frac{1}{3}km \approx 1cm$$

$$\therefore \quad 1km \approx 3\ cm\ - - - - - - - - (2)$$

$$From\ (1)\ and\ (2), for\ the\ scale, \quad 1mt = 3\ cm$$

$$Now, if\ we\ consider\ length\ of\ the\ scale\ as\ 15\ cm, it\ will\ cover \frac{15}{3} = 5\ minutes$$

$$and\ therefore\ the\ required\ time\ 3\ mt\ and\ 30\ \text{sec}\ can\ be\ shown\ in\ this\ scale$$

Now a horizontal line 15 cm long is drawn and is divided into 5 equal parts so that each major division shows one minute. From left staring 0 at 2nd division major units are marked sequentially toward right as 0, 1, 2, 3 and 4. The 1st division is further divided into 6 divisions so that each minor division shows 10 seconds and starting at 0 mark placed earlier the sub-divisions are marked as 10, 20, 30, 40, 50 and 60 toward left. R.F. and unit names are mentioned accordingly. Thus the scale is constructed and the required time is indicated.

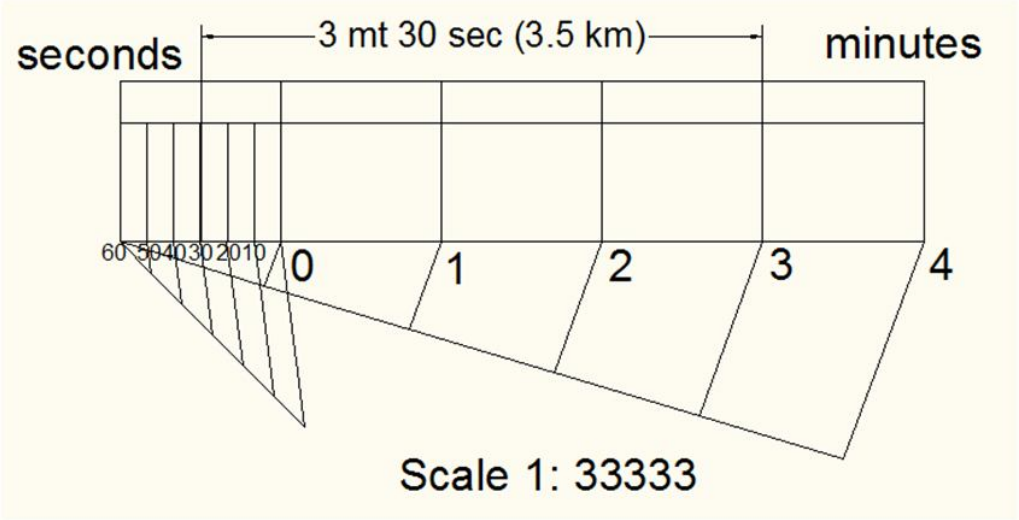

6.8 Principle of Diagonal Scales

The principle of diagonal scale is to obtain any fractional part of a short line by following the diagonal division method. In this method we get fractional part of a line, say 1/9th of length, 1/15th of length etc.

Let the given short line AB which is required to be divided into 12 equal parts.

- ✓ Erect a perpendicular BC of any suitable length and divide it into 12 equal parts.
- ✓ Join AC and draw lines 1-1', 2-2', 3-3'… etc. parallel to AB at each division point. Thus dividing is complete indirectly.
- ✓ If you need 1/12th of AB, 1-1' will be your required length. If you need 2/12th of AB, 2-2' is your required length. Similarly 3-3' represents 3/12th of AB, 4-4' represents 4/12th of AB and so on.

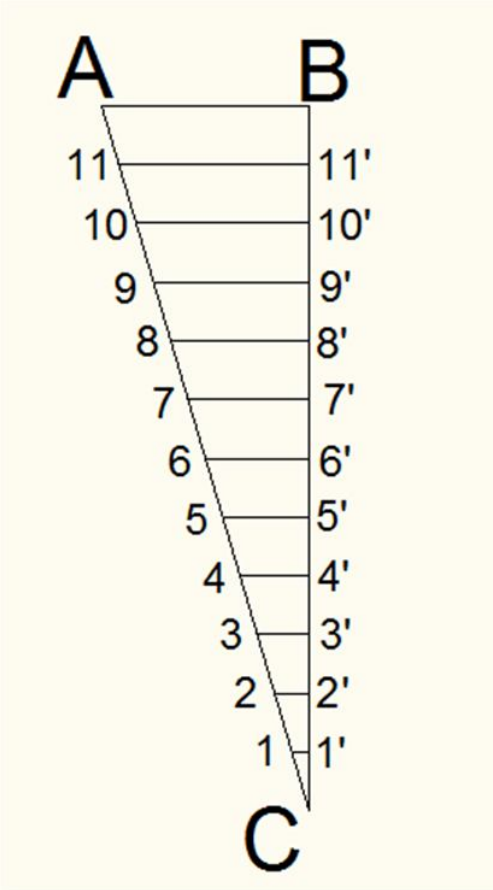

Fig. 6.1 Diagonal division technique

Proof:

From figure it is obvious that triangle ABC and triangle 4-4'-C are similar triangles.

$$\text{So, } \frac{4-4'}{AB} = \frac{C-4'}{BC} = \frac{\frac{4}{12}BC}{BC} = \frac{4}{12}$$

$$\therefore \quad 4-4' = \frac{4}{12}AB$$

6.9 Construction of Diagonal Scales

Following are the steps for constructing a plain scale

- ✓ Find out the R.F., if not given directly.
- ✓ Find out the length of scale

$$= R.F. \times Actual\ length\ of\ object\ or\ Maximum\ length\ to\ be\ measured$$

[Note: If data is not available take the length of scale about 15 cm or 6 inches]

- ✓ Draw a straight line, preferably horizontal, of required length as found in previous step.
- ✓ Divide the line into a number of divisions relating to the length of object and maximum length to be measured such that one segment represents one major unit.
- ✓ Place mark 0 at the end of 1st main division and mark the other divisions sequentially toward right as 1,2,3….. etc.
- ✓ Divide the 1st main division into a number of divisions such that each of these sub-divisions represents one 1st sub-unit. For instance if the scale need to measure in yards, feet and inches, number of horizontal sub-divisions will be 3. On the other hand if the scale is to measure in decimeter, centimeters and millimeters or in meters, 1/10th of meter and 1/100th of meter number of horizontal sub-divisions will be 10.
- ✓ Mark the sub-unit sequentially toward left as 1, 2, 3…… etc. or 0.1, 0.2, 0.3……. etc. If space is limited they can be marked after every 2 division like 0, 2,4,….. etc.
- ✓ Draw a perpendicular of suitable length at the left end and complete the rectangle considering the two mutually perpendiculars lines as length of two sides.
- ✓ Divide the vertical line at left end into a number of divisions such that each of one sub-division represents one 2nd sub-unit. For instance if the scale need to measure in yards, feet and inches, number of vertical sub-divisions will be 12. On the other hand if the scale is to measure in decimeter, centimeters and millimeters or in meters, 1/10th of meter and 1/100th of meter number of vertical sub-divisions will be 10.
- ✓ At each vertical sub-division point draw a line parallel to the baseline.
- ✓ Draw a diagonal line by joining left-top corner point and the horizontal sub-division point immediately before the left-bottom corner. At every horizontal sub-division point draw a parallel line to this diagonal line.
- ✓ Mention the R.F. of the scale below the figure.
- ✓ Mention the name of main unit and sub-units either at below or at the respective ends of the scale.

6.9.1 Worked-out Examples of Diagonal Scale Construction

Example 6.7: Construct a diagonal scale to show kilometers, hectometers and decameters when 2.5 centimeters are equal to 1 kilometer and long enough to measure upto 5.7 kilometers. Find R.F. of the scale and indicate distances

(i) 4 kilometers 5 hectometers 4 decameters and (ii) 5.86 kilometers on the scale.

Solution:

$$R.F. = \frac{2.5}{1 \times 10 \times 10 \times 10 \times 10 \times 10} = \frac{1}{40000} \quad or \quad 1:40000$$

$$Length\ of\ Scale\ =\ R.F.\ \times Maximum\ length\ to\ measure$$

$$= \frac{1}{40000} \times 6\ km = \frac{1}{40000} \times 6 \times 1000 \times 100\ cm = 15\ cm$$

[To avoid fraction, maximum distance is take 6 km instead of 5.7 km]

Now a horizontal line 15cm long is drawn and is divided into 6 equal parts. From left staring 0 at 2nd division major units are marked sequentially toward right as 0, 1, 2, 3, 4 and 5. The 1st division is further divided into 10 divisions and starting at 0 mark placed earlier the sub-divisions are marked after every 2 division as 2, 4, 6, 8 and 10 toward left. At left end a perpendicular of length equal to one major division is drawn and a rectangle is completed considering the mutually perpendicular lines as two sides. The vertical line at left end is divided into 10 equal parts and at each division point a line parallel and equal length of the base line is drawn. Top left corner and the point corresponding to 9hm is connected with a diagonal line. At the remaining 9 horizontal sub-division points parallel lines are drawn to the 1st diagonal line. Vertical divisions are marked sequentially from bottom toward top at every 2 division as 2, 4, 6, 8 and 10. At all the horizontal major division points vertical lines are drawn. R.F. and unit names are mentioned accordingly. Thus the scale is constructed and the required distances are indicated.

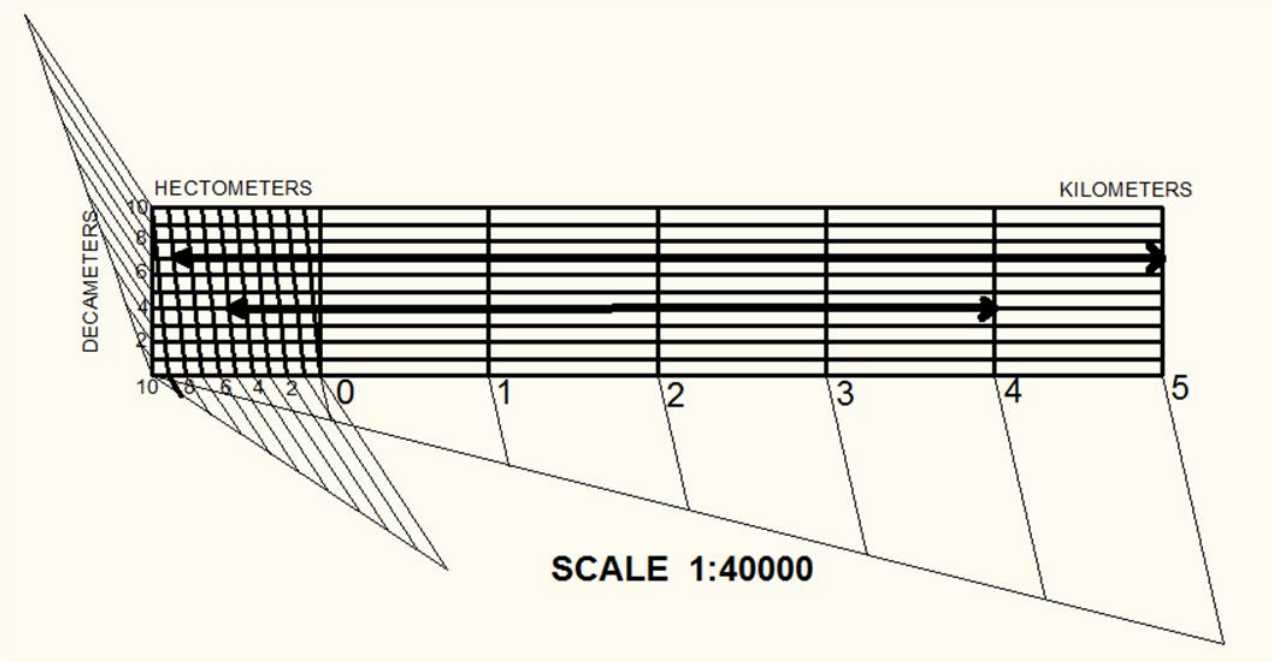

Example 6.8:

Construct a diagonal scale that measures 1 inch for an equivalent actual length of 1 yard, can show yards, feet and inches and can measure length up to 6 yds. Also show 2 yds. 2 ft 5 inch on it.

Solution:

$$R.F. = \frac{1}{1 \times 3 \times 12} = \frac{1}{36} \quad or \quad 1:36$$

$$Length\ of\ Scale\ = R.F.\ \times Maximum\ length\ to\ measure$$
$$= \frac{1}{36} \times 6\ yd = \frac{1}{36} \times 6 \times 3 \times 12\ inch = 6\ inch$$

Now a horizontal line 6 inch long is drawn and is divided into 6 equal parts. From left staring 0 at 2nd division major units are marked sequentially toward right as 0, 1, 2, 3, 4 and 5. The 1st division is further divided into 3 divisions and starting at 0 mark placed earlier the sub-divisions are marked as 1, 2 and 3 toward left. At left end a perpendicular of length equal to one major division is drawn and a rectangle is completed considering the mutually perpendicular lines as two sides. The vertical line at left end is divided into 12 equal parts and at each division point a line parallel and equal length of the base line is drawn. Top left corner and the point corresponding to 2ft is connected with a diagonal line. At the remaining two horizontal sub-division points parallel lines are drawn to the 1st diagonal line. Vertical divisions are marked sequentially from bottom toward top at every 2 division as 2, 4, 6, 8, 10 and 12. At all the horizontal major division points vertical lines are drawn. R.F. and unit names are mentioned accordingly. Thus the scale is constructed and the required distances are indicated.

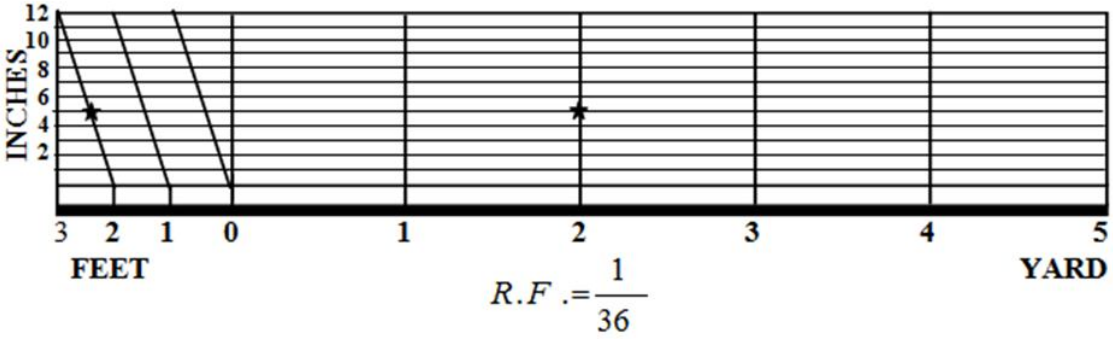

Example 6.9:

In a certain engineering drawing 1m length is represented by 20mm. Construct a scale for this drawing showing meters, decimeters and centimeters and measure 2 meters, 5 decimeters and 8 centimeters on it.

Solution:

$$R.F. = \frac{20}{1 \times 1000} = \frac{1}{50} \quad or \quad 1:50$$

Maximum measuring length is not given here. Assume the drawing scale length is 15 cm (standard value).

$$\therefore Maximum\ measuring\ length = \frac{Drawing\ Scale\ length}{R.F.} = \frac{15}{1/50} = 750\,cm = 7.5\,m$$

As the maximum length is a fractional number , so number of major division may either be 7 (for which maximum measuring length will be 7 m) or 8 (for which maximum measuring length will be 8 m). Both are acceptable as we have to show a distance only 2m 5dm 8cm on this scale. Let us take 7.

Now a horizontal line 15cm long is drawn and is divided into 7 equal parts. From left staring 0 at 2nd division major units are marked sequentially toward right as 0, 1, 2, 3, 4, 5 and 6. The 1st division is further divided into 10 divisions and starting at 0 mark placed earlier the sub-divisions are marked after every 2 division as 2, 4, 6, 8 and 10 toward left. At left end a perpendicular of length equal to one major division is drawn and a rectangle is completed considering the mutually perpendicular lines as two sides. The vertical line at left end is divided into 10 equal parts and at each division point a line parallel and equal length of the base line is drawn. Top left corner and the point corresponding to 9dm is connected with a diagonal line. At the remaining 9 horizontal sub-division points parallel lines are drawn to the 1st diagonal line. Vertical divisions are marked sequentially from bottom toward top at every 2 division as 2, 4, 6, 8 and 10. At all the horizontal major division points vertical lines are drawn. R.F. and unit names are mentioned accordingly. Thus the scale is constructed and the required distances are indicated.

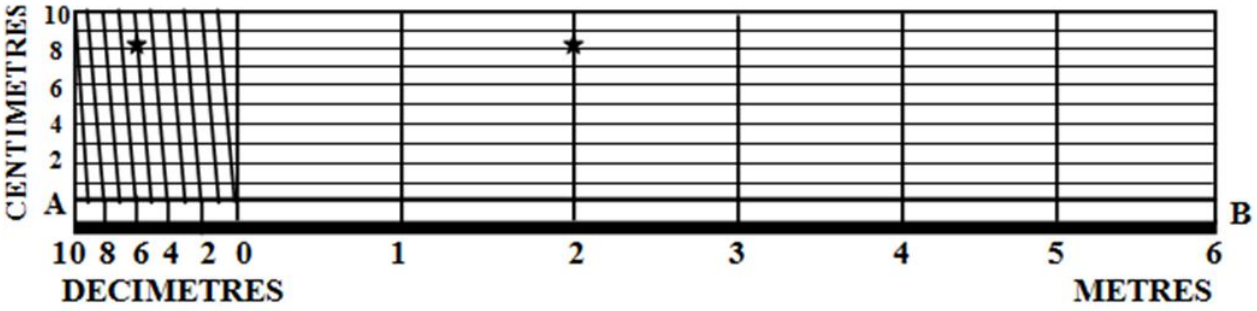

$R.F$.=1 : 50

Example 6.10: Construct a scale to read 1m to 300m.

Maximum measuring length is given here i.e. 300 m. Considering a drawing scale length as 15 cm.

$$\therefore Drawing\ scale\ length\ = R.F. \times Maximum\ measuring\ length$$

$$\therefore R.F.\ = \frac{Drawing\ scale\ length}{Maximum\ measuring\ length} = \frac{15}{300 \times 100} = \frac{1}{2000} \quad or\ 1:2000$$

Here, we have to measure single meter as well as 300 meter. So our major unit should be 100th of meters, 1st sub-unit should be 10th of meter and 2nd sub-unit or diagonal sub-unit should be single meters.

Now a horizontal line 15cm long is drawn and is divided into 3 equal parts. From left staring 0 at 2nd division major units are marked sequentially toward right as 0, 1, and 2. The 1st division is further divided into 10 divisions and starting at 0 mark placed earlier the sub-divisions are marked after every 2 division as 20, 40, 60, 80 and 100 toward left. At left end a perpendicular of length equal to one major division is drawn and a rectangle is completed considering the mutually perpendicular lines as two sides. The vertical line at left end is divided into 10 equal parts and at each division point a line parallel and equal length of the base line is drawn. Top left corner and the point corresponding to 90m is connected with a diagonal line. At the remaining 9 horizontal sub-division points parallel lines are drawn to the 1st diagonal line. Vertical divisions are marked sequentially from bottom toward top at every 2 division as 2, 4, 6, 8 and 10. At all the horizontal major division points vertical lines are drawn. R.F. and unit names are mentioned accordingly. Thus the scale is constructed and the required distances are indicated.

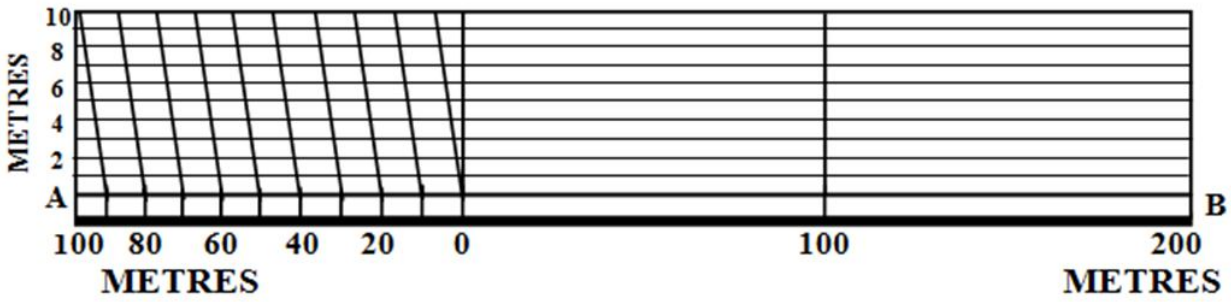

$$R.F. = \frac{1}{2000}$$

Example 6.11: On a map 1 inch represents 1 mile. Construct a scale to read miles, furlongs and minimum 20 yards distance and mark 4 miles 6 furlongs and 120 yards on it.

Solution:

Here given, 1 inch = 1 mile

$$\therefore R.F. = \frac{1inch}{1mile} = \frac{1}{1\times 1760\times 3\times 12} = \frac{1}{63360}$$

Here maximum measuring length is not given. Let us assume the drawing scale length is 6 inch.

∴ Maximum measuring length = Drawing scale length ÷ R.F.

$$= 6 \div \frac{1}{63360} = 6\times 63360 \ = 380160 \text{ inch} = 6 \text{ miles}$$

Now a horizontal line 6 inch long is drawn and is divided into 6 equal parts. From left staring 0 at 2nd division major units are marked sequentially toward right as 0, 1, 2, 3, 4 and 5. The 1st division is further divided into 8 divisions and starting at 0 mark placed earlier the sub-divisions are marked after every 2 division as 2, 4, 6 and 80 toward left. At left end a perpendicular of length equal to one major division is drawn and a rectangle is completed considering the mutually perpendicular lines as two sides. The vertical line at left end is divided into 11 equal parts and at each division point a line parallel and equal length of the base line is drawn. Top left corner and the point corresponding to 7 furlongs is connected with a diagonal line. At the remaining 7 horizontal sub-division points parallel lines are drawn to the 1st diagonal line. Vertical divisions are marked sequentially from bottom toward top at every 2 division as 20, 60, 100, 140, 180 and 220. At all the horizontal major division points vertical lines are drawn. R.F. and unit names are mentioned accordingly. Thus the scale is constructed and the required distances are indicated.

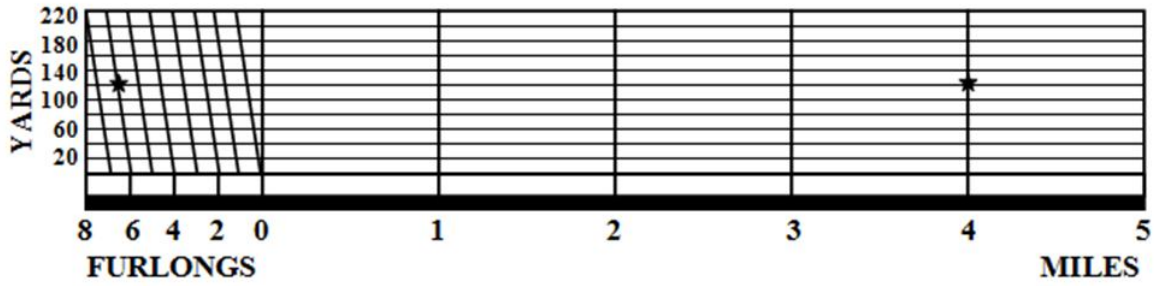

***Scale* 1:63360**

Example 6.12:

An engineering drawing is prepared for microscopic parts of a machine. It is required to construct a scale for this drawing that can measure in millimeters, $1/10^{th}$ of single millimeter and $1/100^{th}$ of single millimeters. The scale should be such that 4mm length is represented by 10cm and it should be able to measure upto 5mm. Construct the scale and measure 3.33mm and 1.09mm on this scale.

Solution:

$$R.F. = \frac{10 \times 10}{4} = 25 \quad or \quad 25:1$$

$$Length\ of\ Scale = R.F. \times Maximum\ length\ to\ measure$$
$$= 25 \times 5\ mm = 125mm = 12.5\ cm$$

Now a horizontal line 12.5cm long is drawn and is divided into 5 equal parts. From left staring 0 at 2nd division major units are marked sequentially toward right as 0, 1, 2, 3 and 4. The 1st division is further divided into 10 divisions and starting at 0 mark placed earlier the sub-divisions are marked after every 2 division as 0.2, 0.4, 0.6 and 0.8 toward left. At left end a perpendicular of length equal to one major division is drawn and a rectangle is completed considering the mutually perpendicular lines as two sides. The vertical line at left end is divided into 10 equal parts and at each division point a line parallel and equal length of the base line is drawn. Top left corner and the point corresponding to 0.9mm is connected with a diagonal line. At the remaining 9 horizontal sub-division points parallel lines are drawn to the 1st diagonal line. Vertical divisions are marked sequentially from bottom toward top at every 2 division as 0.02, 0.04, 0.06 and 0.08. At all the horizontal major division points vertical lines are drawn. R.F. and unit names are mentioned accordingly. Thus the scale is constructed and the required distances are indicated.

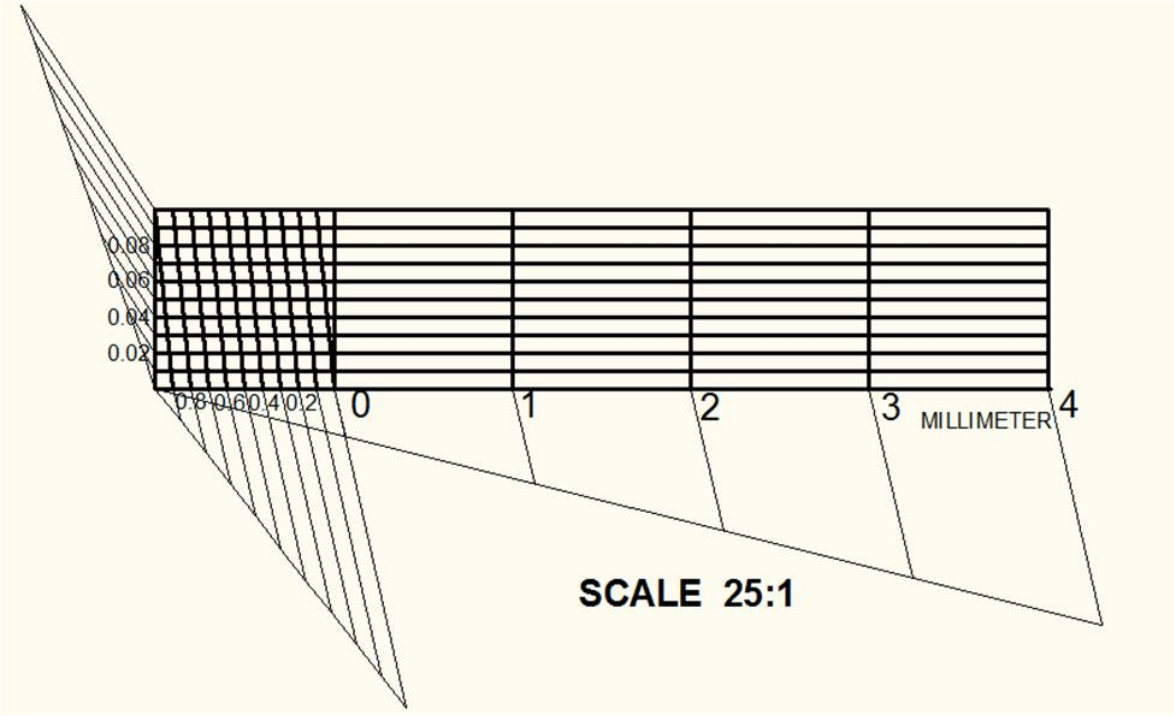

Example 6.13:

An aeroplane is flying at a speed of 360 kmph. Draw a scale to represent 6 km by 1 cm and to show distance upto 60 km. Find R.F. of the scale and on the scale show distances covered by the aeroplane in

1. 3 minutes 22 seconds
2. 5 minutes 36 seconds

Solution:

$$R.F. = \frac{1cm}{6km} = \frac{1}{6 \times 1000 \times 100} = \frac{1}{600000} \quad or \quad 1:600000$$

$$Length\ of\ Scale\ = R.F. \times Maximum\ length\ to\ measure$$

$$= \frac{1}{600000} \times 60km = \frac{1}{600000} \times 60 \times 1000 \times 100\ cm = 10\ cm$$

$$Speed\ of\ aeroplane\ = 360\ kmph = \frac{360\ km}{1\ hr} = \frac{360\ km}{60\ mt} = \frac{1\ km}{\frac{1}{6}\ mt}$$

$$\therefore 1\ km \approx \frac{1}{6}\ mt \ldots\ldots\ldots\ldots\ldots\ldots\ldots\ldots\ldots\ldots (1)$$

From R.F.,

$6\ km \approx 1\ cm \qquad \therefore 1\ km \approx \frac{1}{6}\ cm \ldots\ldots\ldots\ldots\ldots\ldots\ldots\ldots\ldots\ldots (2)$

From equations (1) and (2), $\frac{1}{6}\ mt \approx \frac{1}{6}\ cm \qquad \therefore 1\ mt \approx 1\ cm$

Now a horizontal line 10cm long is drawn and is divided into 10 equal parts so that each division represents 1 minute. From left staring 0 at 2nd division major units are marked sequentially toward right as 0, 1, 2, 3…… and 9. The 1st division is further divided into 6 divisions so that each sub-division represents 10 seconds and starting at 0 mark placed earlier the sub-divisions are marked after every 2 division as 20, 40 and 60 toward left. At left end a perpendicular of length equal to one major division is drawn and a rectangle is completed considering the mutually perpendicular lines as two sides. The vertical line at left end is divided into 10 equal parts and at each division point a line parallel and equal length of the base line is drawn. Top left corner and the point corresponding to 50 seconds is connected with a diagonal line. At the remaining 5 horizontal sub-division points parallel lines are drawn to the 1st diagonal line. Vertical divisions are marked sequentially from bottom toward top at every 2 division as 2, 4, 6, 8 and 10. At all the horizontal major division points vertical lines are drawn. R.F. and unit names are mentioned accordingly. Thus the scale is constructed and the required distances are indicated.

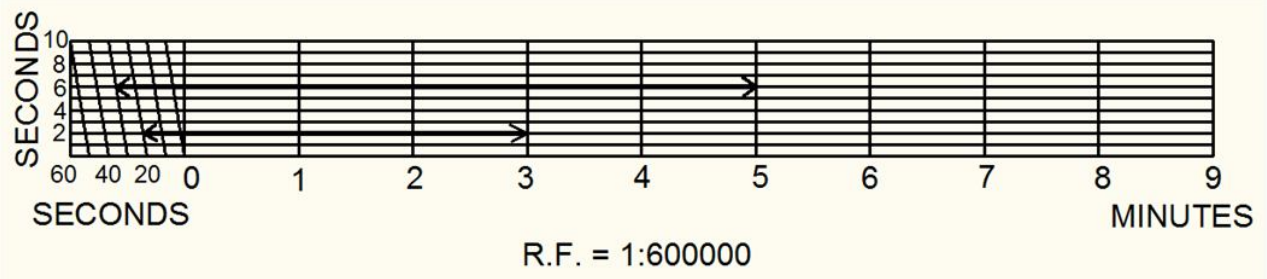

Exercise and Assignments:

1. Construct a plain scale to show meters and decimeters, when 3 centimeters are equal to 2 meters and long enough to measure upto 5 meters. Show a distance of 2 meters 7 decimeter and 4.8 meters on the scale.
2. Construct a plain scale that can measure 1m to 50m. Show a distance 38m on the scale.
3. Construct a scale to show miles and furlongs, when 2.5ft on the scale represents 30 mile and long enough to measure upto 6 miles.
4. In a certain map 1 acre represents 2500 square kilometers of land area. Construct a scale for a portion of that map which can measure in kilometers and its 1st decimal point. The scale should be long enough to measure upto 9.7 km.
5. On a map a land of 5 sq. cm represents 45 sq. km. Construct a plain scale to measure a maximum distance of 55 km and show the measurement of 42 km on it.
6. The volume of a room is 640 cubic metre. It is represented by a volume of 80 cubic cm. By measuring R.F. construct a plain scale to measure upto 30 metre. Also show the measurement of 12 metre on it.
7. The distance between Dinajpur and Joypurhat railway station is 144 km and it is covered by the Drutajan Express in 4 hours. Draw a plain scale to measure the time upto single minute. Take R.F. of the scale as $\frac{1}{240000}$. Calculate and show the distance covered by the train in 45 minutes on the scale.
8. Construct a diagonal scale to read meters, decimeters and centimeters and long enough to measure upto 5 meters when 1 meter is represented by 3 centimeters. Indicate on the scale a distance of
    a. 4 meters 7 decimets 6 centimeters.
    b. 3.33 meters.
9. Construct a diagonal scale of R.F. = 1/25 showing millimetre, centimetre and metre and show the measurement of 3 metre 50 cm and 60 mm on it.
10. A plan of a house 12 cm represents 240 m. Construct a diagonal scale to read 250 metres to one metre and show the measurement 137 metres on it.
11. The distance between two station is 480 km. On a map it is represented by a 12 cm length line. Construct a diagonal scale to show kilometers and to measure a distance of 275 km.
12. On a map 15 cm × 8 cm represents an area of 1920 square metres. Find the R.F. and draw the scale of the map to read upto metre and decimeter. Also mark a distance 46 metres and 5 decimetres on it.
13. Ina drawing of machine parts, the original shapes are magnified 50 times. Construct a scale to measure upto 2nd decimal point of a single millimeter and long enough to measure upto 4mm. Show a length of 2.22mm and 1.11mm on the scale.
14. A person is running at a speed of 6 kmph. Draw a scale to represent 6 km by 1 cm and to show distance upto 60 km. Find R.F. of the scale and on the scale show distances covered by the person in
    1. 3 hours 22 minutes
    2. 5 hours 36 minutes

Review Questions

1. Why have you studied scale?
2. Define scale. When scale becomes necessary?
3. Why have you learned to draw scale? In which situation scale is to be drawn along with the drawing?
4. Classify scales according to scale size. Define each type and give practical examples.
5. Classify scale according to measurement capacity. Define each type.
6. Which scales are usually used by engineers?
7. Differentiate between plain and diagonal scale.
8. Which information you think necessary to construct a scale?
9. Define R.F.
10. What is the unit of R.F.? Give logic to your answer.
11. What do you understand when an R.F. is found to be more/less than unity?
12. Is it possible to get a negative/zero value of R.F.? Give logic to your answer.
13. It is mentioned in a drawing that R.F. = 1:5. What is its meaning?
14. It is mentioned in a drawing that R.F. = 2:1. What is its meaning?
15. On a map of Bangladesh you measured the distance from Dinajpur to Dhaka as 6 inch. Actually the distance is 500 miles. What is the R.F. of this map?
16. What should be the possible R.F. for drawing a microscopic element of length 1 nanometer?
17. A 15 cm scale measures a maximum length of 10 km. What is its R.F.?
18. If 9 hectares of area is represented by $1mm^2$ in a map, what is the value of R.F.?
19. During the construction of scale why the zero notation placed at 2nd division?
20. How can you divide a 1mm line in 7 equal parts?
21. Draw a qualitative diagram of a plain/diagonal scale and show a distance.

CHAPTER 7
PROJECTION

Objectives

Objectives of studying this chapter are:

- To learn to explain the purpose and theory of multi view projections
- To understand "Glass Box Method" of orthographic projection
- To learn to mention the principal views and combination of views
- To learn to convert pictorial drawings into orthographic or multi view projection
- To learn to represent circular surfaces, hidden surfaces in orthographic projection
- To know the precedence of lines in multi view projection
- To know the necessity of pictorial projection
- To learn the procedure to construct box for isometric and oblique drawings
- To learn to convert orthographic projection into isometric projection

7.1 Introduction

All forms of engineering and technical work require that a two dimensional surface (paper) be used to communicate ideas and the physical description of a variety of shapes. To provide necessary information about an object to the manufacturer or to any other concerned party, it is usual practice to provide projection(s) of that object.

7.1.1 Projection

Projection is the process in which the rays of sight are taken in a particular direction from an object to form an image on a plane. If straight lines (rays) are drawn from various points on the contour of the object to meet a transparent plane, thus the object is said to be projected on that plane. The figure or view formed by joining, in correct sequence, the points at which these lines meet the plane is called the projection of the object.

7.1.2 Picture Plane/Plane of Projection

The plane or surface on which the rays of sight are projected and combined to form a view is called picture plane.

7.1.3 View

The image formed on a picture plane by projecting rays of sight is called a view.

7.1.4 Projector

The lines or rays drawn from the object to the plane are called projectors.

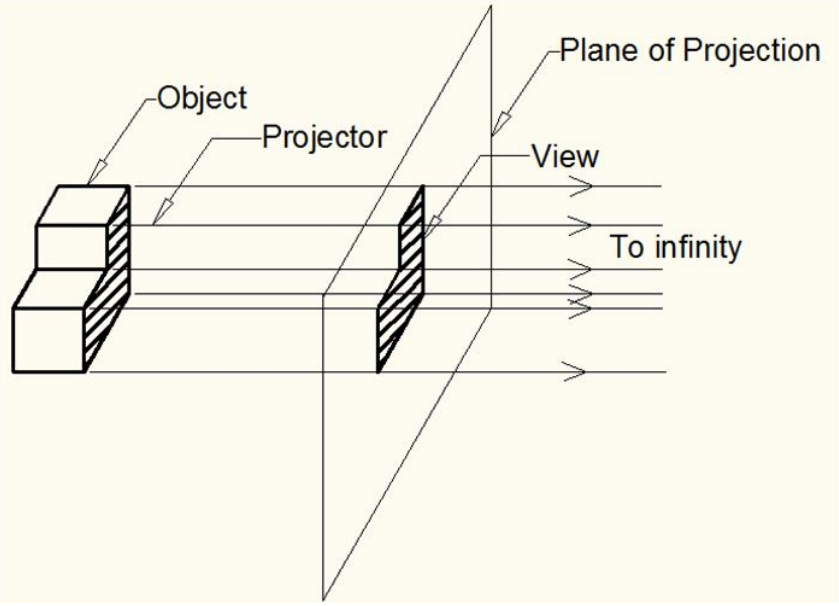

Fig. 7.1 Projection and Its Different Elements

7.2 Types of Projection

1. Orthographic/ multi view Projection
2. Pictorial Projection
3. Perspective Projection

7.2.1 Orthographic Projection

'ORTHO' means right angle and orthographic means right angled drawing. When the projectors are perpendicular to the plane on which the projection is obtained, it is known as orthographic projection. Following six views are possible in orthographic projection of a solid object.

a. Top View
b. Front view
c. Left View
d. Right View
e. Rear view
f. Bottom view

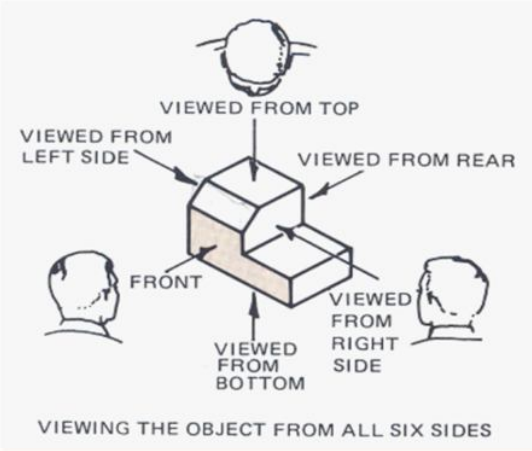

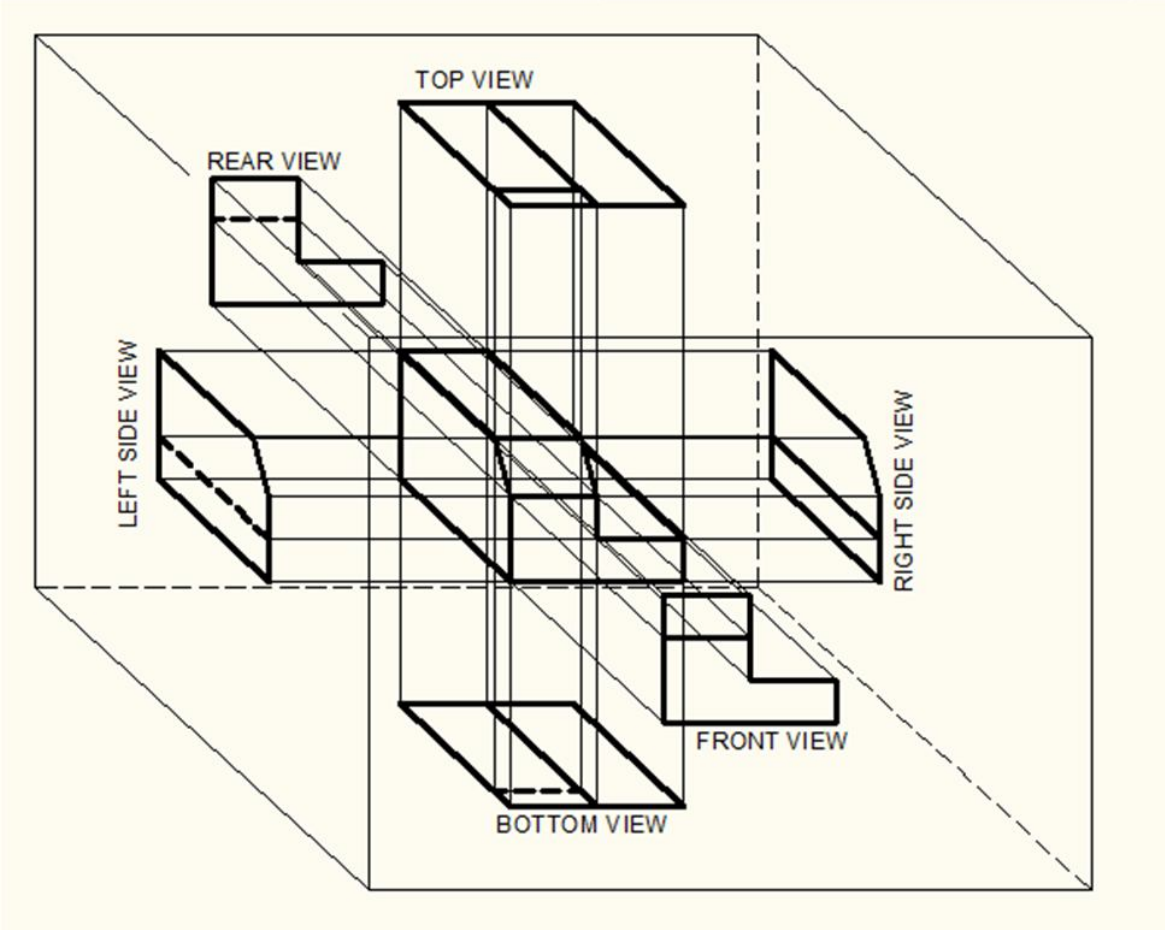

Fig. 7.2 Orthographic Views

7.2.2 Pictorial Projection

The Projections in which the description of the object is completely understood in one view is known as pictorial projection. They have the advantage of conveying an immediate impression of the general shape and details of the object, but not its true dimensions or sizes. Pictorial projections may be of two types as

a. Axonometric
b. Oblique

7.2.2.1 Axonometric Projection

It is a type of parallel pictorial projection in which an object appears to be rotated to show its all three dimensions. Axonometric projections are classified according to how the principle axes are oriented relative to the projected surface. There may be three types as:

i. Isometric
ii. Dimetric
iii. Trimetric

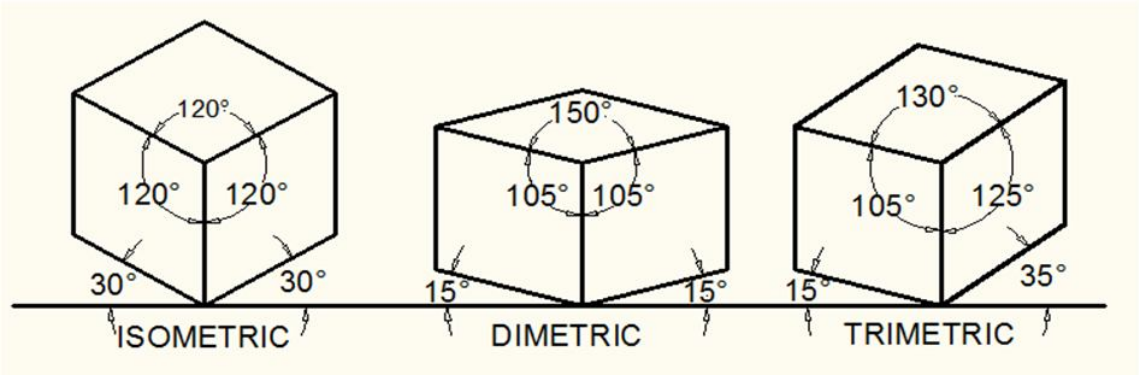

Fig. 7.3 Axonometric Projections

7.2.2.2 Oblique Projection

It is a type of parallel pictorial projection in which projectors are parallel to each other but they are not perpendicular to the picture plane. The angle is usually kept 15^0-45^0. This may be of two types:

i. **Cavalier Projection:** In this case, the dimensions along all the axes are plotted in full scale.
ii. **Cabinet Projection:** In this case, the dimensions along the diagonal axis are plotted by reducing it to half of the actual value. Dimensions along other axes are plotted in full scale.

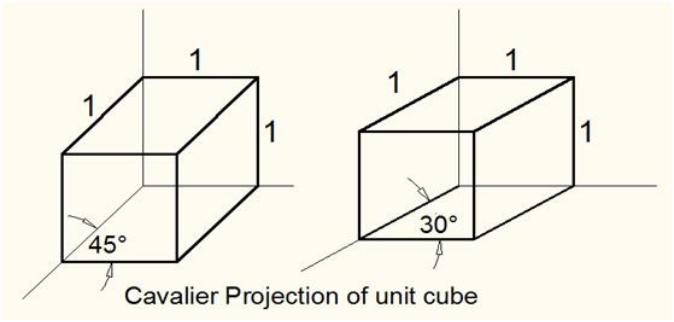

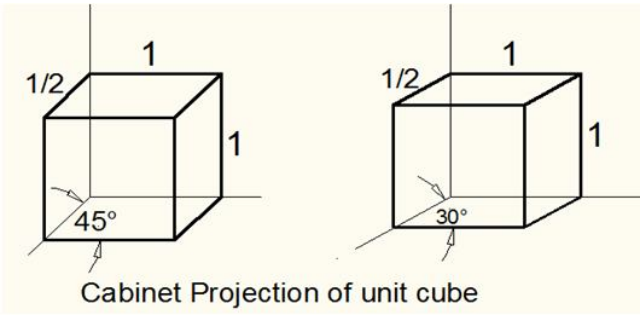

Fig. 7.4 Oblique Projection

7.2.3 Perspective Projection

It is a type of pictorial projection in which projectors are not parallel to each other and they occur at an angle to the picture plane in such a way that they converge to a point as if an observer sees the view on the picture plane from that point. In case of perspective projection observer is considered to be at finite distance where in case of any other type of projection observer is considered to be at infinity.

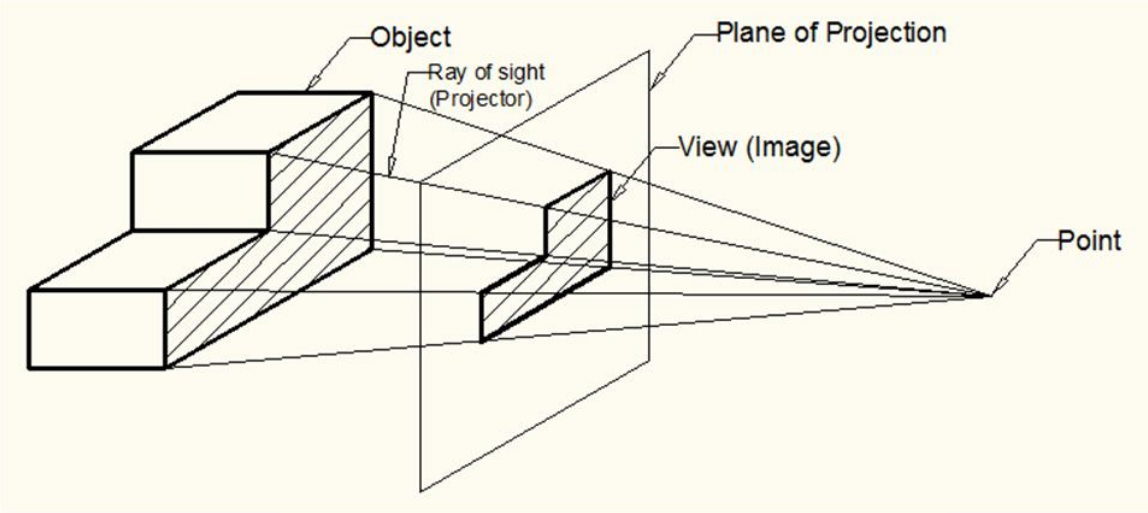

Fig. 7.5 Perspective Projection

7.3 Details of Orthographic Projection

Basically, Orthographic projection is any single projection made by dropping perpendiculars to a plane. In short, orthographic projection is the method of representing the exact shape of an object by dropping perpendiculars from two or more sides of the object to planes, generally at right angles to each other; collectively, the views on these planes describe the object completely. Descriptive geometry is basically the use of orthographic projection in order to solve for advanced technical data involving the spatial relationship of points, lines, planes, and solid shapes. The most common means of understanding these types of orthographic projection is - The Glass Box method.

7.3.1 The Glass Box Method

The Glass Box method was used primarily for descriptive geometry problems. It can be suitably used for understanding the generation of orthographic views. Key points of "the glass box method" are:

- ✓ The user imagines that the object is enclosed in a transparent "box" said to be "the glass box".
- ✓ Each view of the object is established on its corresponding glass box surface.
- ✓ To obtain a view, perpendicular projectors are drawn originating at each point of the object and extending to the related box surface.
- ✓ The box is imagined as hinged so that it can be unfolded on to one flat plane (the paper). The box is unfolded to obtain the arrangement of views.

In figure 7.6, the vertical lines of sight (A) and horizontal lines of sight (B) are assumed to meet at infinity. The line of sight is always perpendicular to the plane of projection, represented by the surfaces of the glass box (top, front, and right side). Projection lines(C) connect the same point on the plane of projection from view to view, always at right angle. A point is projected up on the plane of projection where its projector cuts that image plane. In the figure 7.6, point 1, which represents a corner of the given object, has been projected on to the three primary image planes. When it intersects the horizontal plane (top plane of projection), it is identified as 1H, when it intersects the frontal plane (front plane of projection), it is identified as 1F, and where it intersects the profile plane (right side plane of projection), it is labeled 1P.

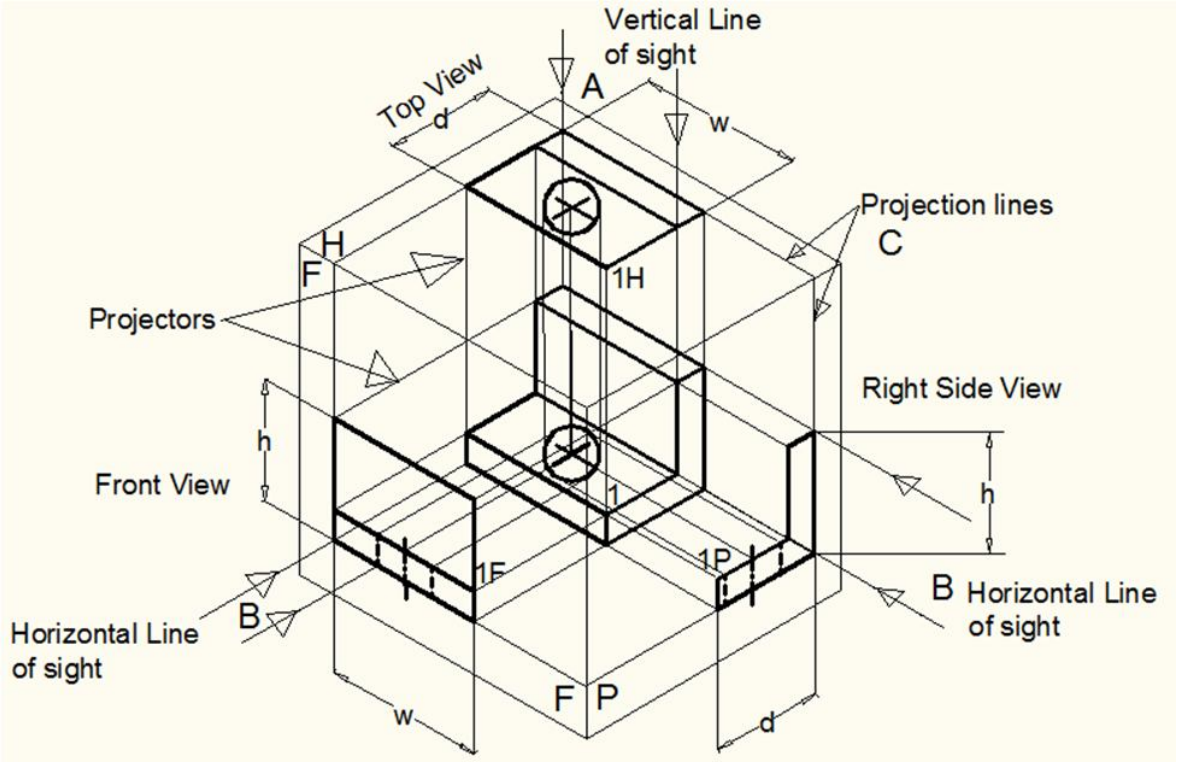

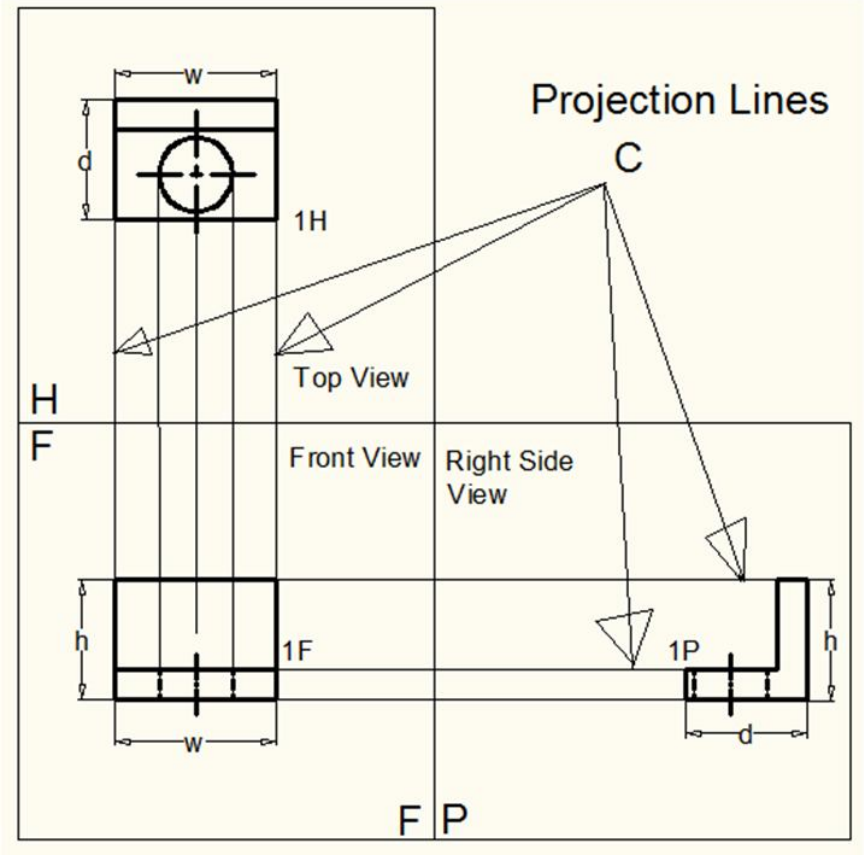

Fig. 7.6 The Glass Box Method

7.3.2 The Six Principal Views

Let us surround the object entirely by asset of six planes, each at right angles to each other. On these planes, views of the object can be obtained as is seen from the top, front, right side, left side, bottom and rear. Consider the object and its projection in fig. 7.2; think now of the six sides, or the plane of the paper; the front is already in the plane of the paper, and the other sides are, as it were, hinged and rotated in position as shown in figure 7.5.

- ✓ The projection on the frontal plane is called the front view or vertical projection or front elevation.
- ✓ The projection on the horizontal plane is called the top view or horizontal projection or plan.
- ✓ The projections on the left/right sides are called left/right profile views or left/right side view or left/right profile projection or left/right side elevation.
- ✓ By reversing the direction of sight a bottom view is obtained instead of a top view or a rear view instead of a front view.

In actual work, there is rarely an occasion when all six principal views are needed on one drawing. All these views are principal views. Each of the six views shows two of the three dimensions of height, width and depth.

In general, when the glass box is opened, its six sides are revolved outward so that they lie in the plane of the paper. And each image plane is perpendicular to its adjacent image plane and parallel to the image plane across from it. Before it is revolved around its hinged fold line (reference line).A fold line is the line of intersection between any hinged (adjacent) image planes.

The left side, front, right side, and back are all elevation views. Each is vertical. The top and bottom planes are in the horizontal plane. But in most cases the top, front, and right sides are required.

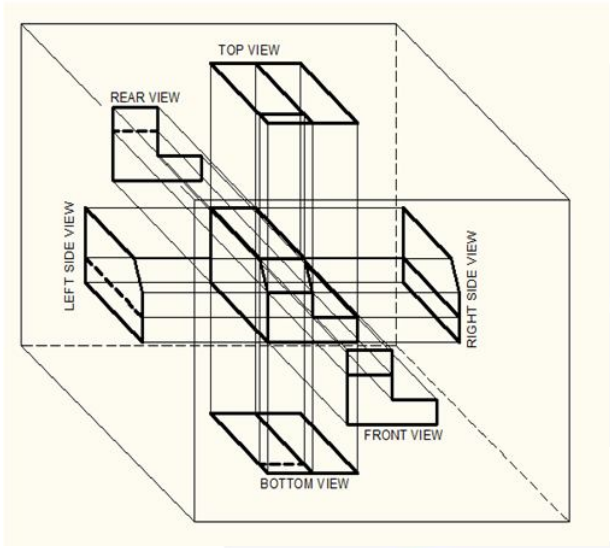

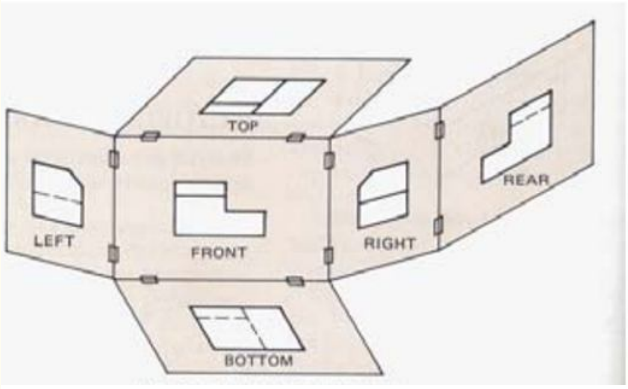

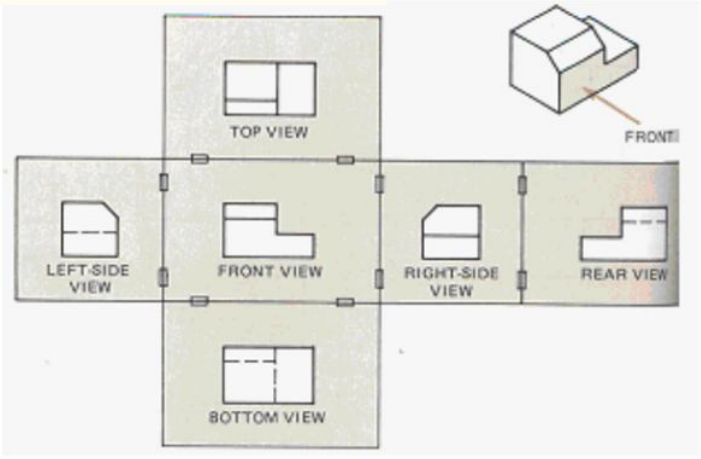

Fig. 7.7 Six Principal Views by Glass Box Method (3rd Angle)

7.3.3 Arrangement of Views

As discussed earlier, the most usual combination selected from the six possible views consists of the top, front and right side views. Sometimes the left- side view helps to describe an object more clearly than the light side view. Orthographic views are arranged in two techniques as

a. 1st angle projection (Used in European countries; ISO standard) also known as British system
b. 3rd angle projection (Used in Bangladesh, Canada, USA, Japan, Thailand) also known as American system.

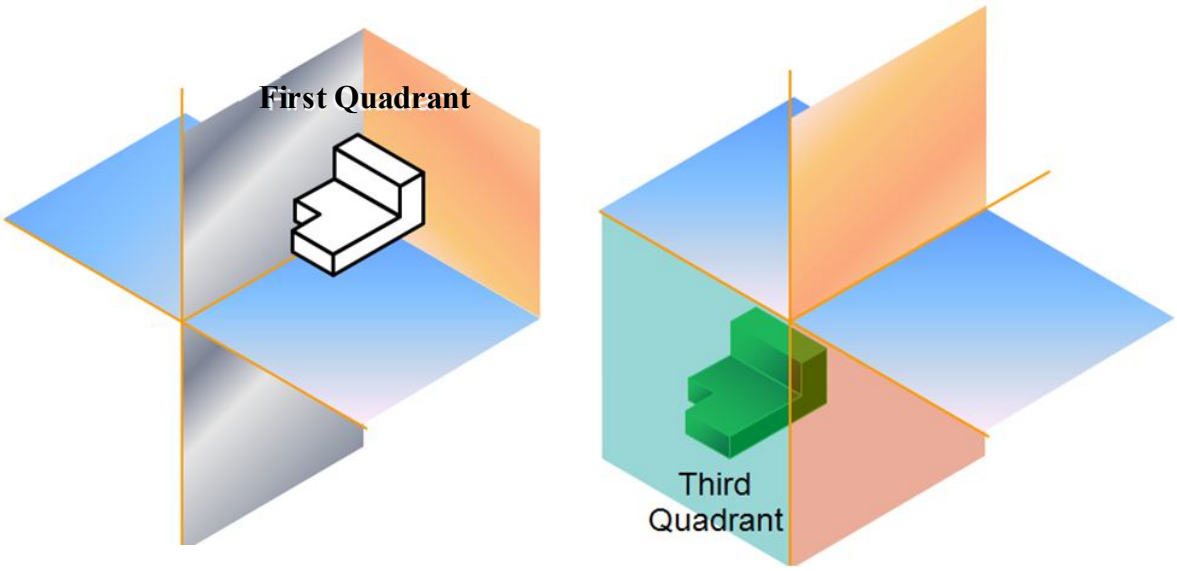

Fig. 7.8 Relative Position of Object in First and Third Angle Projection System

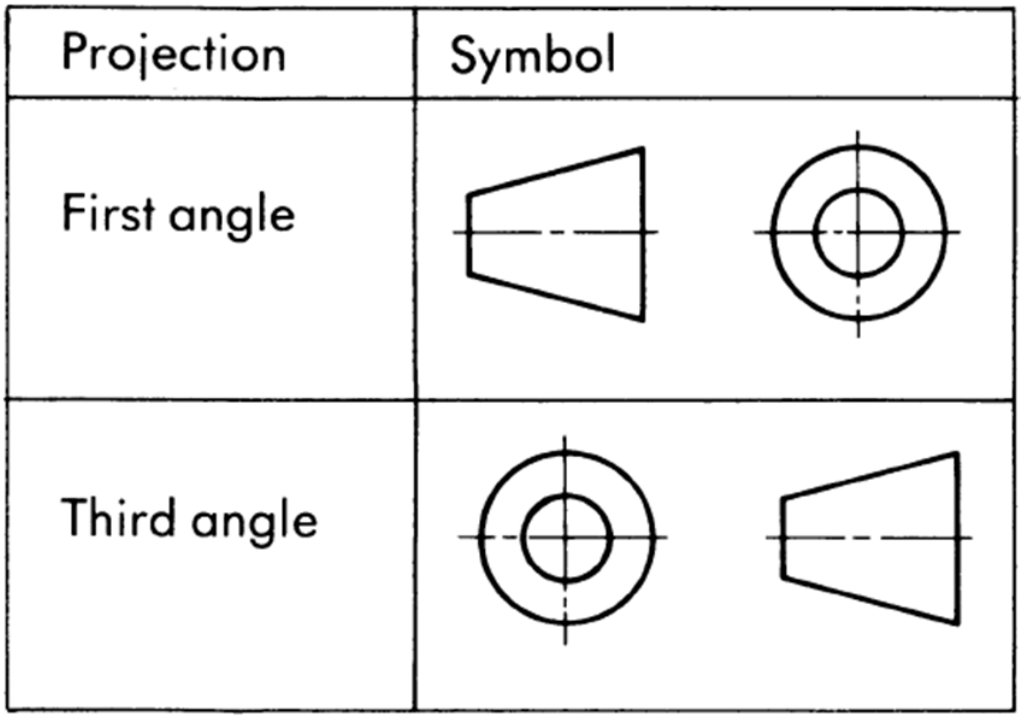

Fig. 7.9 Standard Symbol to Indicate First and Third Angle Projection in Drawing

7.3.3.1 Glass Box Concept for 1st Angle Projection

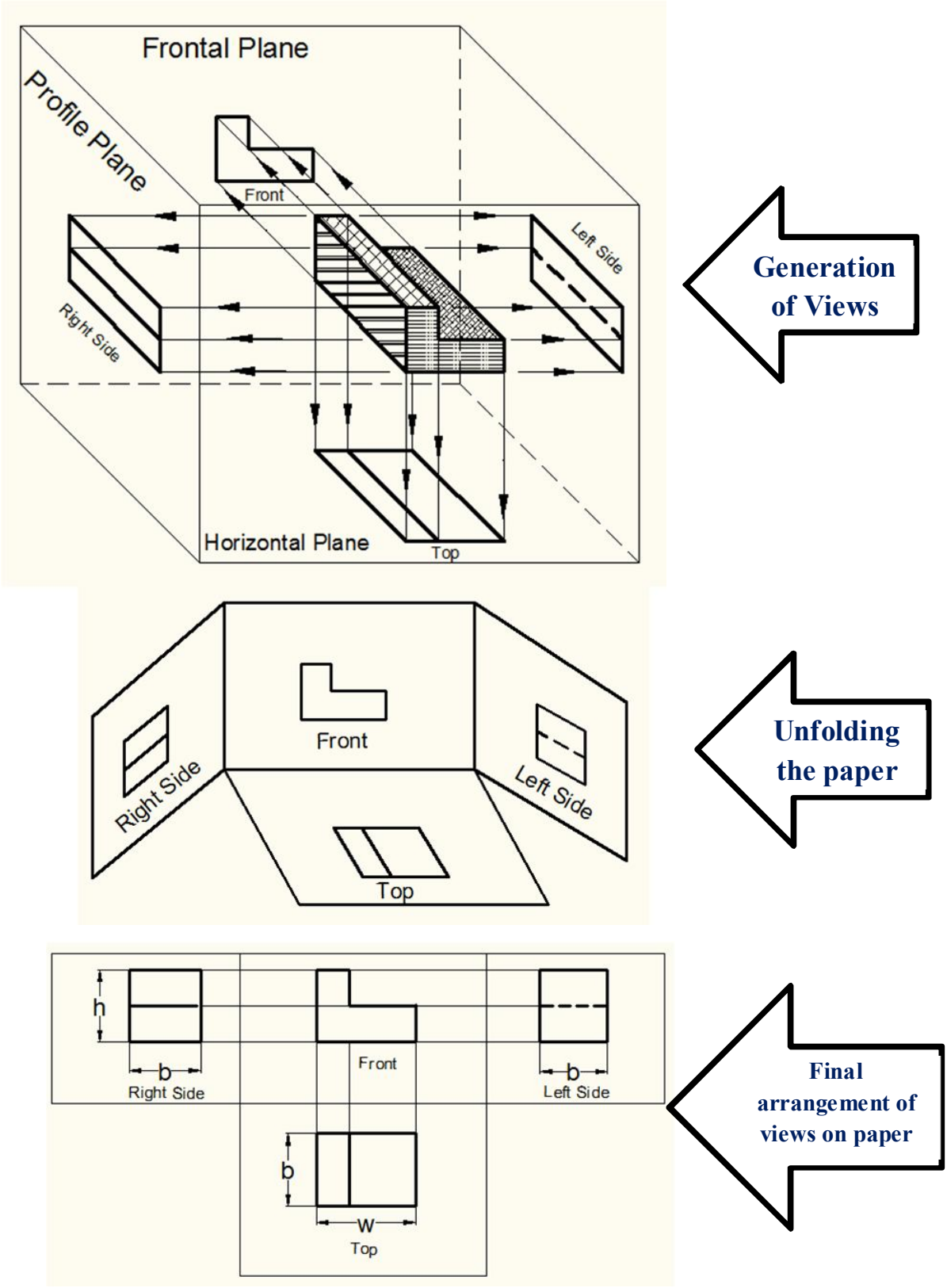

Fig. 7.10 Glass Box Presentation of 1st Angle Projection and Arrangements of Views

7.3.3.2 Glass Box Concept for 3rd Angle Projection

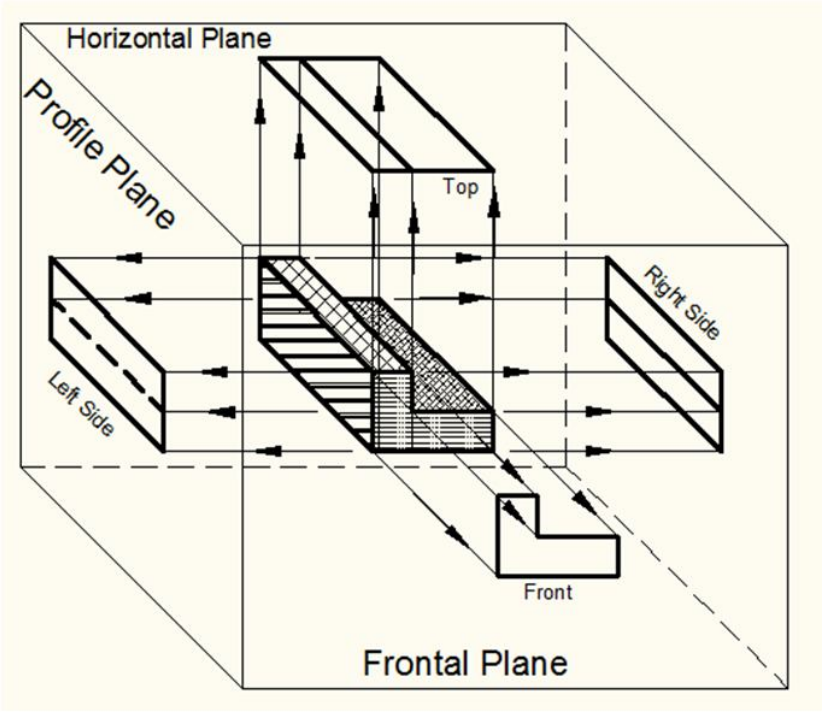

Generation of Views

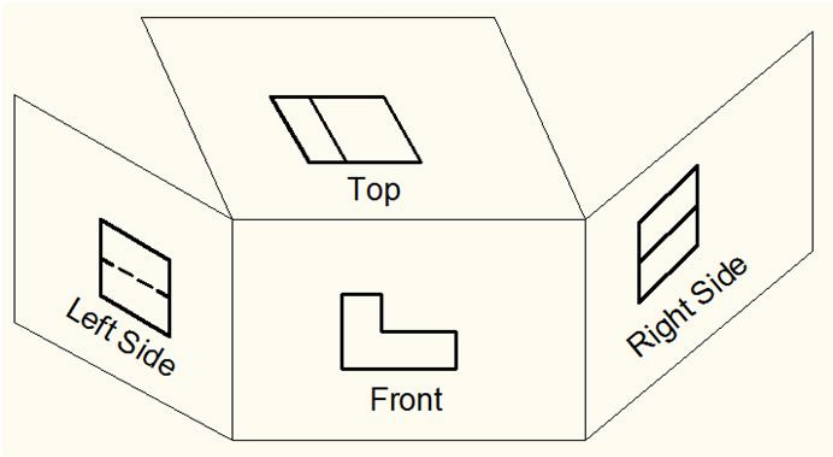

Unfolding the paper

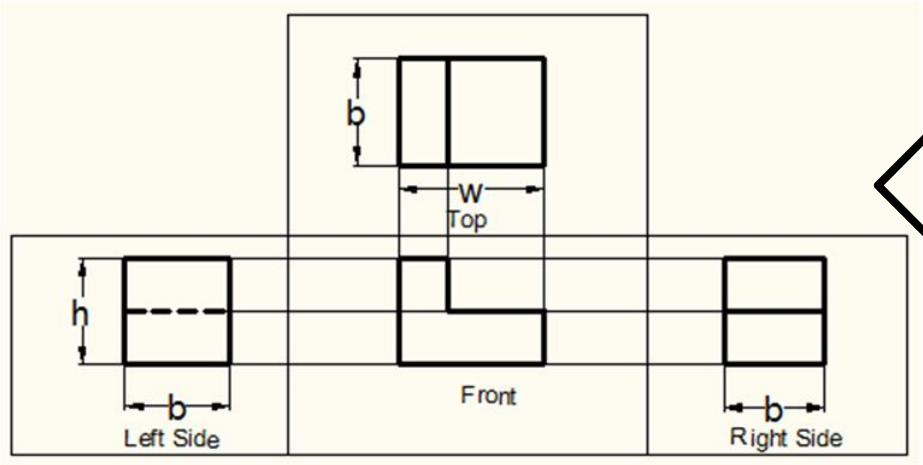

Final arrangement of views on paper

Fig. 7.11 Glass Box Presentation of 3rd Angle Projection and Arrangements of Views

7.3.4 Orthographic Projections of Parallel, Inclined and Oblique Surfaces

- ✓ An edge appears in true length when it is parallel to the plane of projection, as a point when it is perpendicular to the plane and shorter than true length when it is inclined to the plane.
- ✓ Similarly, a surface appears in true shape when it is parallel to the planes of projection, as line when it is perpendicular to the plane and fore-shortened when it inclined to the plane.
- ✓ A line that is not parallel to any plane of projection is called an oblique skew line and it does not show in true shape in any of the views, but each of the bounding edges shows interval length in one view and is fore shortened in the other two views.

When an inclined or oblique line is to be projected it is helpful to identify and draw the end points and then joining them to obtain the projection.

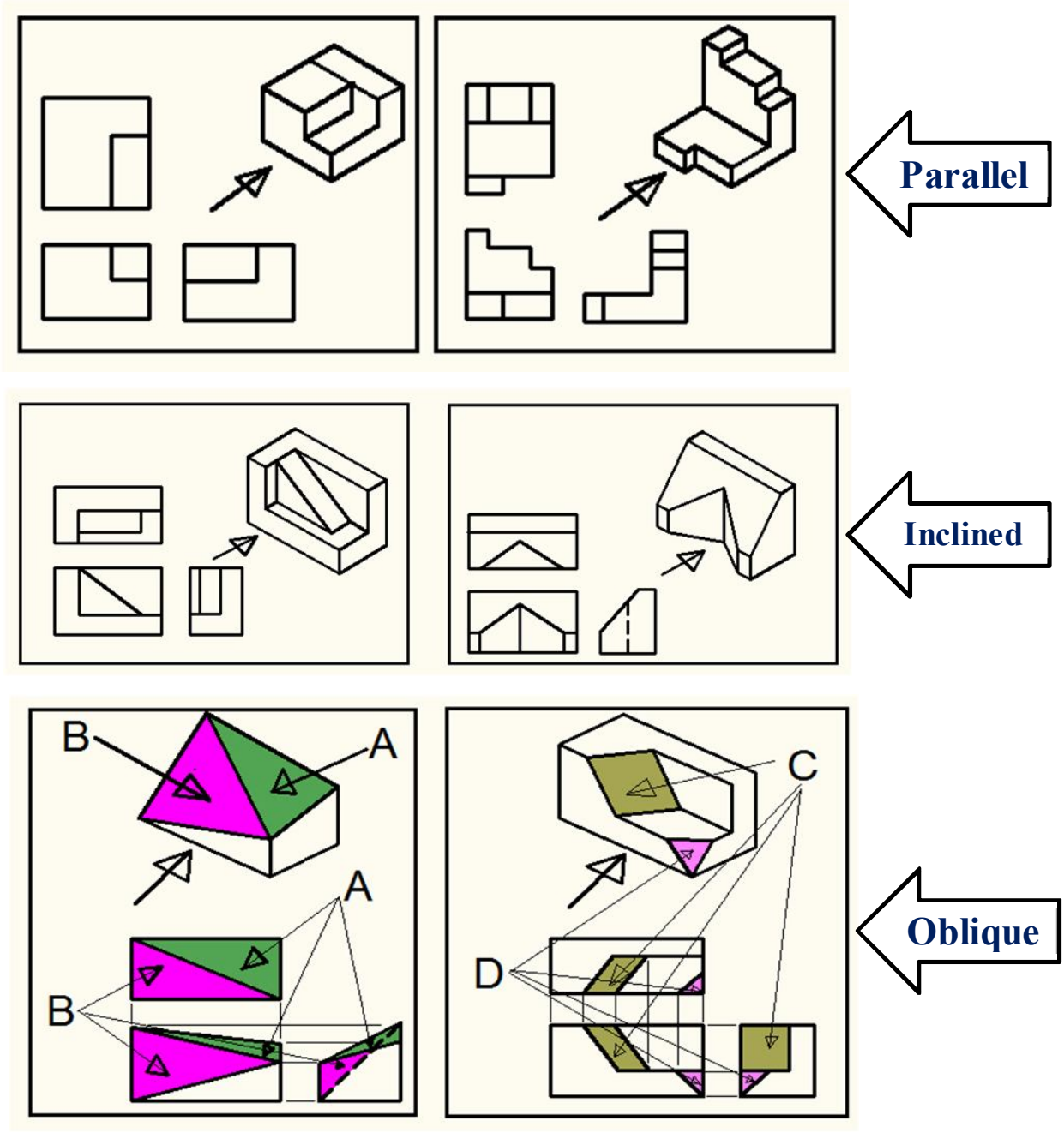

Fig. 7.12 Orthographic Projection of Parallel, Inclined and Oblique Surfaces (3rd Angle)

7.3.5 Orthographic Projections of Hidden Surfaces

To describe an object with complex internal features completely, a drawing should contain lines representing all the edges, intersections, and surface limits of the objects. In any view there will be some parts of the object that cannot be seen from the position of the observer, as they will be covered by portion of the object closer to the observer's eye. The edges, intersections, and surface limits of these hidden parts are indicated by a discontinuous line called a dashed line or hidden line. Particular attention should be paid to the execution of these dashed lines. If carelessly drawn, they ruin the appearance of a drawing.

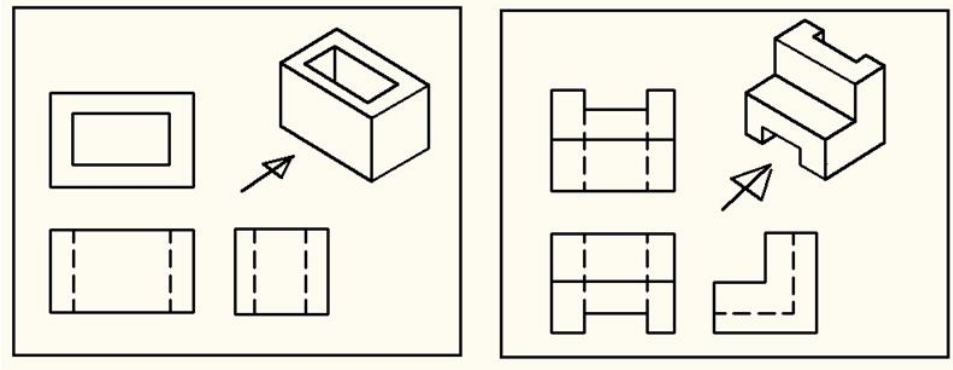

Fig. 7.13 Orthographic Projection of Pbjects with Hidden Surfaces (3rd Angle)

7.3.6 Orthographic Projections of Curved Surfaces and Holes

To represent curved surfaces in orthographic projections, center lines are commonly utilized. All the center lines are the axes of symmetry.

- ✓ Every part with an axis, such as a cylinder will have the axis drawn as center line before the part is drawn.
- ✓ Every circle will have its center at the intersection of two mutually perpendicular center lines.

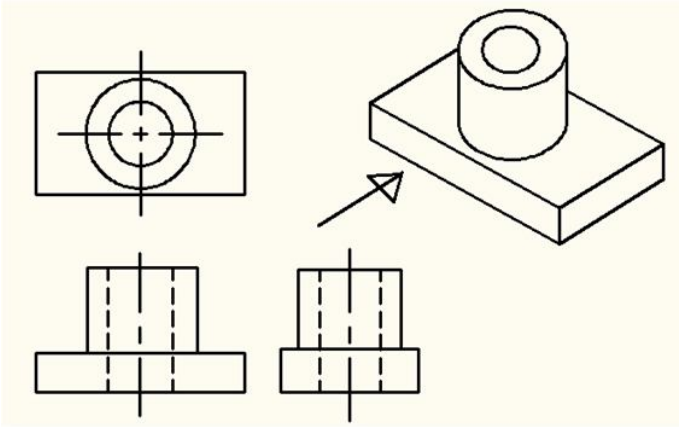

Fig. 7.14 Orthographic Projection of Objects with Hole and Curved Surface (3rd Angle)

7.3.7 Precedence of Lines

In any view there is likely to be a coincidence of lines. Hidden portions of the object may project to coincide with visible portions. Center lines may occur where there is a visible or hidden out line of some part of the object. Since the physical features of the object must be represented full and dashed lines take precedence over all other lines since visible out line is more prominent by space position, full lines take precedence over dashed lines. A full line could cover a dashed line, but a dashed line could not cover a full line. When any two lines coincide, the one that is more important to the readability of the drawing takes precedent over the other. The following line gives the order of precedence of lines.

1. Full line
2. Dashed line
3. Careful line or cutting – plane line
4. Break lines
5. Dimension and extension lines.
6. Crosshatch lines.

7.3.8 Method of Obtaining Views

To obtain the front view of an object let the observer take a position in front of the object at an infinite distance.

- ✓ Let the object is being looked from an infinite distance, therefore all the rays of sight originated from object will be parallel to each other.
- ✓ In case of 3rd angle projection, place an imaginary vertical plane in between the object and the observer such that all the rays of sight cut the plane.
- ✓ In case of 1st angle projection the vertical plane should be placed behind the object such that all the rays of sights, if extended backward, cut the plane.
- ✓ According to be shape of objects, join the points of intersection of the vertical plane and rays of sight. The points which are connected by lines in original object should be connected in the vertical plane.
- ✓ Thus a front view of the object will be obtained on the vertical plane.

All other 5 views can be obtained in similar way. The plane of projection (vertical, in case of front view) should be parallel to the face for which views are being drawn. For example, in case of top view the plane will be horizontal.

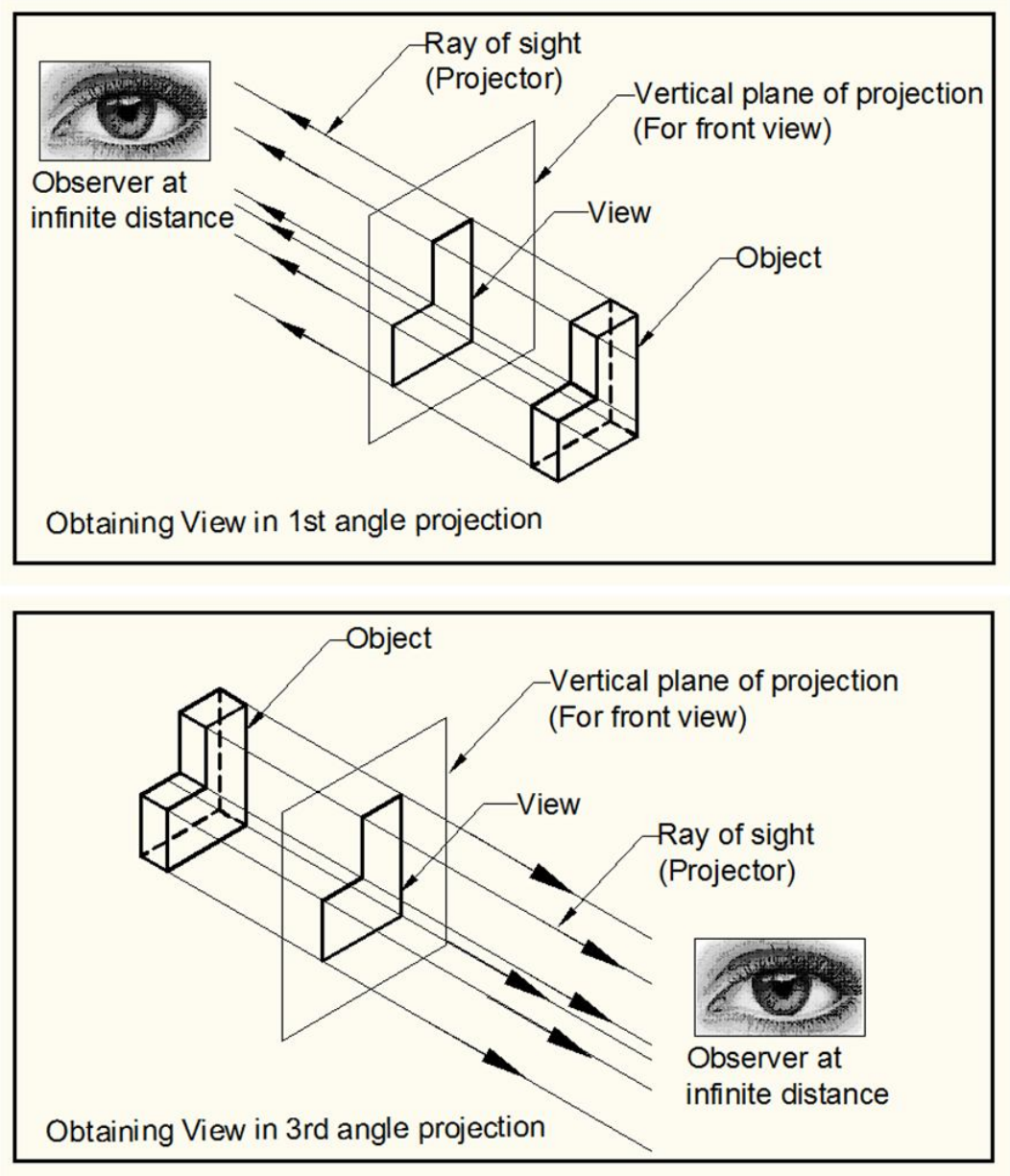

Fig. 7.15 Method of Obtaining Views

7.3.9 Methods of Projecting Views

There are several methods of projecting views in orthographic projection which are shown in Figure 7.18. In the projection there is a relationship of different views. It is usual practice to draw the front view first, then top and side views are drawn with the help of the vertical and horizontal projection lines. This can be done using T-square, set-squares and compasses. Here only the figure (C) requires the use of compass in addition to T-squares and set-squares.

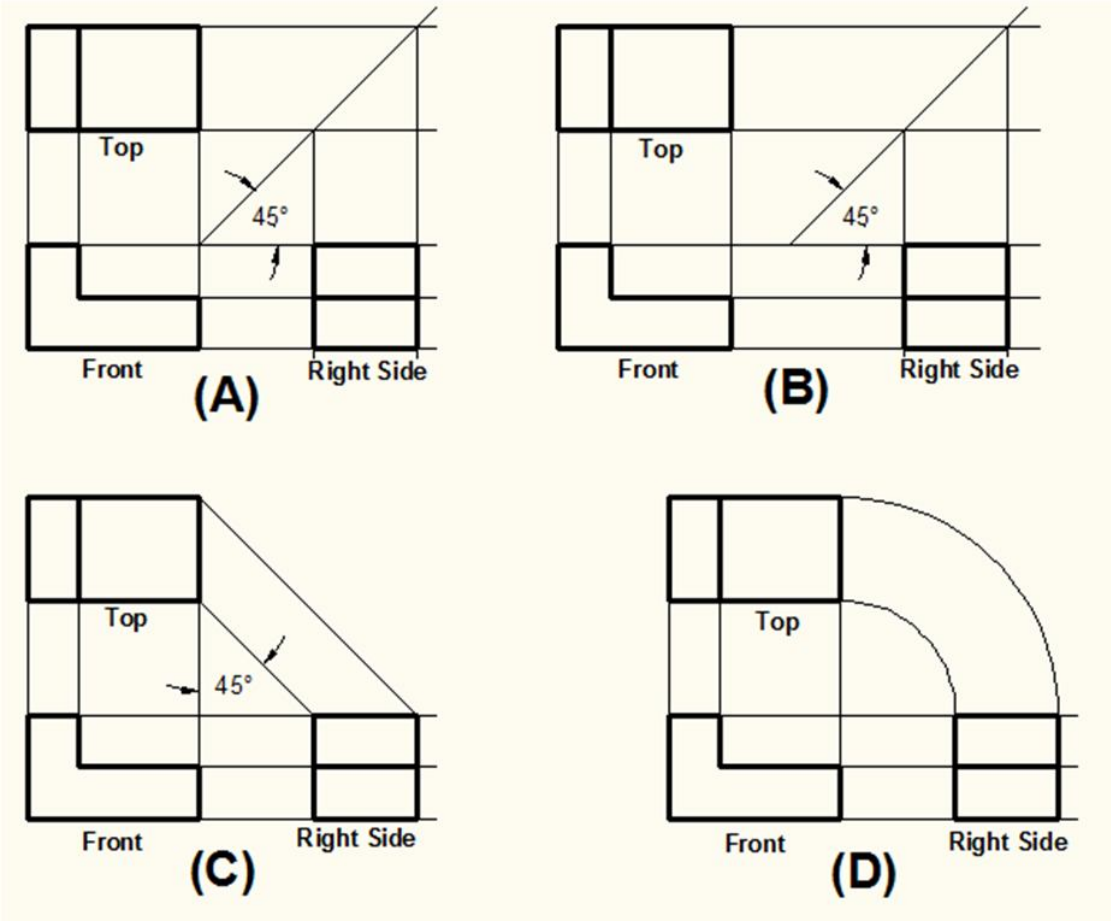

Fig. 7.16 Different Methods of Projecting Views

The method shown in fig. 7.18 (A) and 7.18 (B) are mostly used. This method is sometimes said to be "the diagonal line method".

7.3.10 Spacing Between the Views

In case of figure 7.18 (A) the spacing between views are kept equal where in case of fig. 7.18 (B) the spacing between the front and right side view is wider than that in front and top view. The spacing between views has to be determined or decided beforehand and if equal spacing is needed then fig. (A) can be followed and if a different spacing is needed then fig. (B) can be followed. However, spacing to provide between views depends on

- ✓ Space required for dimensioning.
- ✓ Space required for naming the views.
- ✓ Space required for writing essential notes.

Sufficient space should be provided in order to give dimensions avoiding any crowding and also excessive space should be avoided. If not mentioned or required otherwise 30mm-40mm spacing can be provided between two successive views.

7.3.11 Steps for Projecting Views by Diagonal Line Method

Fig. 7.19 describes the steps of projecting views (3rd angle) by diagonal line method. The steps are:

- ✓ **Step 1:** Following method described in section 7.3.10 draw the front view on the drawing paper.
- ✓ **Step 2:** Project vertically upward lines from every point of the front view where there is a change in shape.
- ✓ **Step 3:** Draw the top view according to the shape of object within its extent enclosed by the vertical projected lines.
- ✓ **Step 4:** Project horizontal lines from every point of the front view where there is a change in shape.
- ✓ **Step 5:** Draw a diagonal line (a line at an angle 45^0 with horizontal) using set-square. Position of this line depends on the spacing requirement between side view and front view. If equal spacing is required then the line should originate at the corner of the front view.
- ✓ **Step 6:** Project horizontal lines toward the diagonal line from every point of the top view where there is a change in shape. These lines will cut the diagonal line.
- ✓ **Step 7:** From every point of intersection draw perpendicular lines toward the horizontal projection lines drawn from the front view.
- ✓ **Step 8:** Now, the area for side view (left/right) will be enclosed. Draw the shapes of left/right view.
- ✓ **Step 9:** Erase unnecessary lines and darken the views.

It is to be noted that for 1st angle projection the lines should be projected according to position of views. For example to draw top view, vertically downward lines need to be projected from front view so that the top view is generated below the front views; for getting right side view horizontal lines from front view are to be projected toward left and so on.

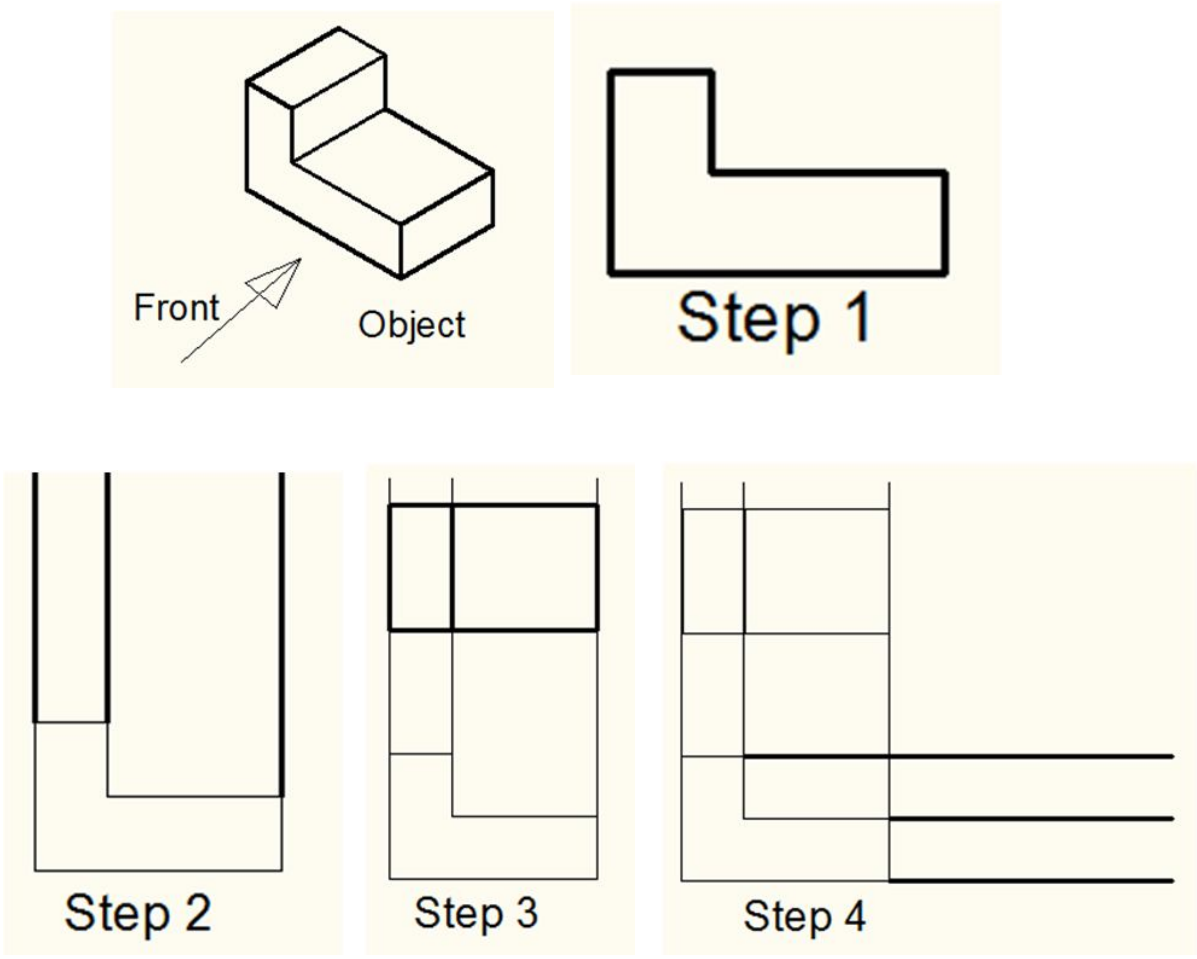

Fig. 7.17 Diagonal Line Method for Projecting Views (3rd angle)

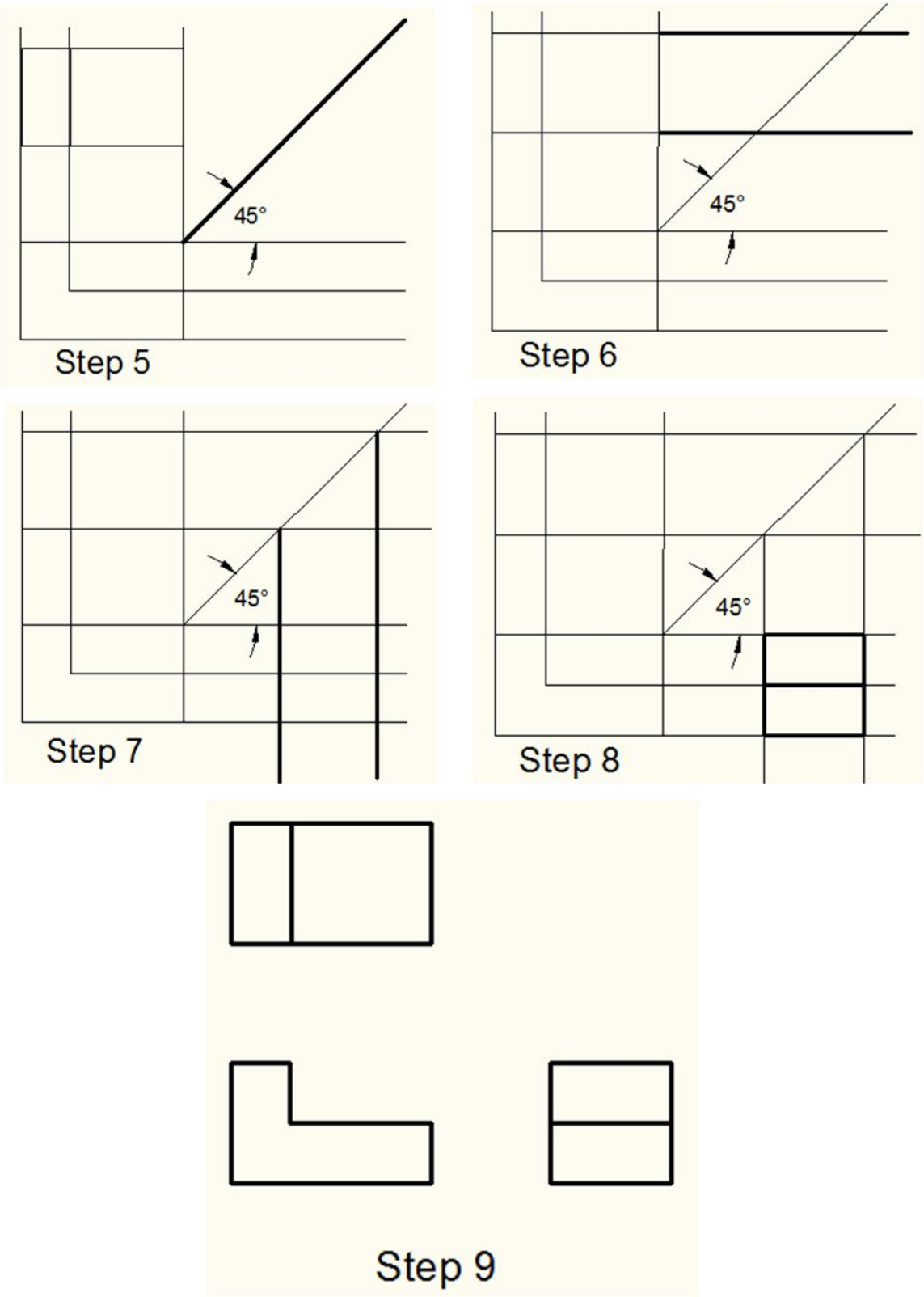

Fig. 7.17 Diagonal Line Method for Projecting Views (3rd angle) Contd.

7.3.12 Worked-out Examples of Orthographic Views

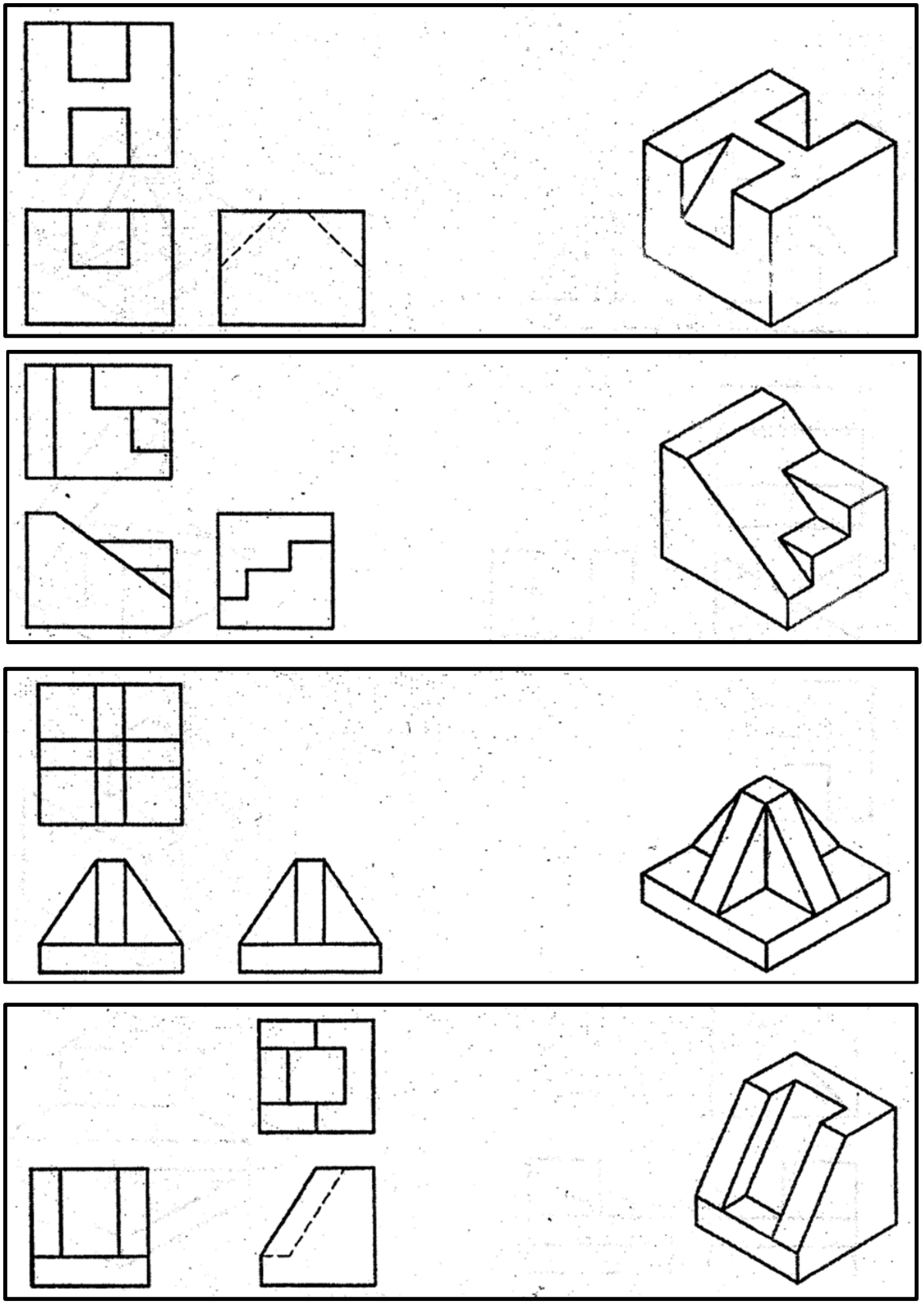

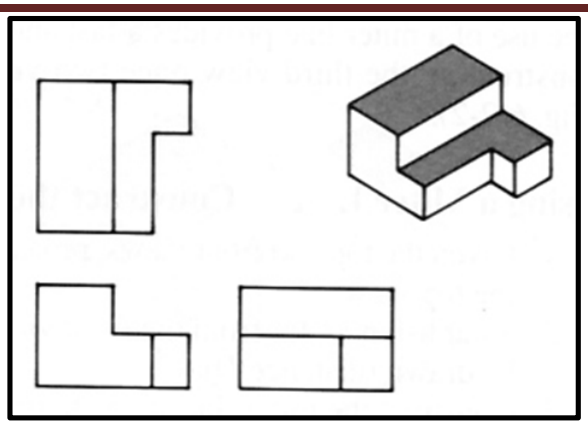

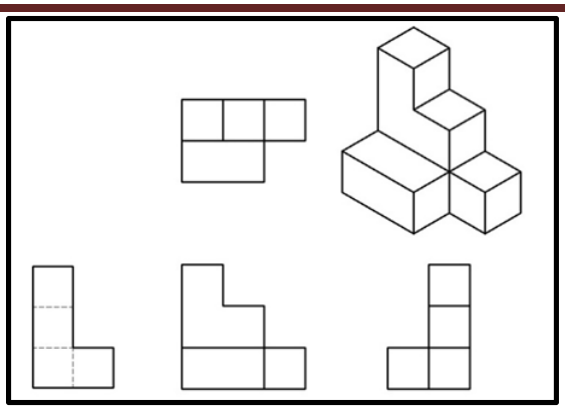

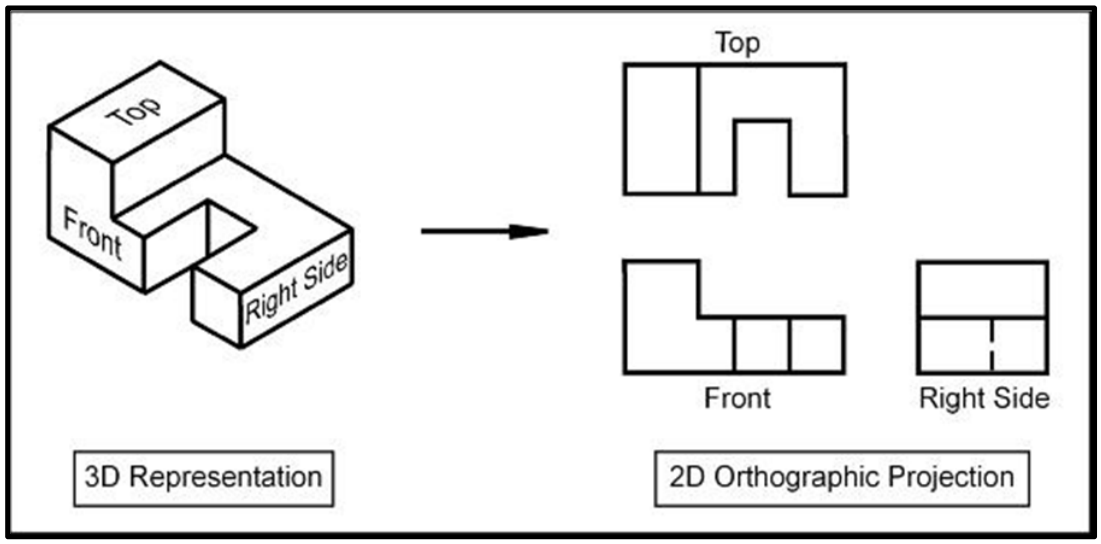
Top
Front
Right Side
Top
Front
Right Side
3D Representation
2D Orthographic Projection

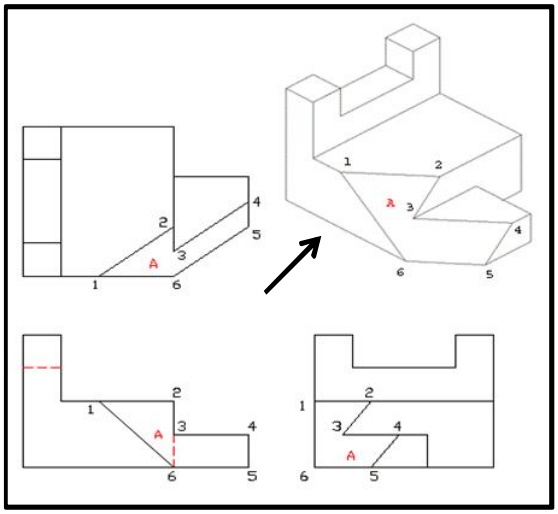

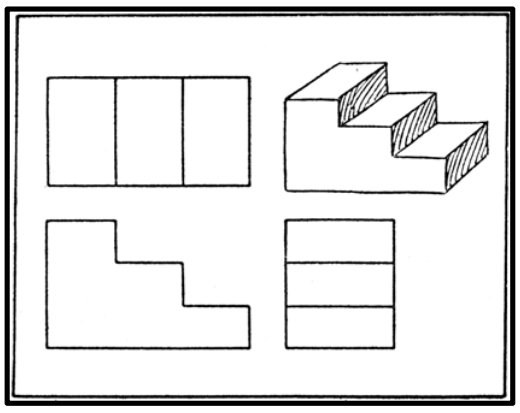

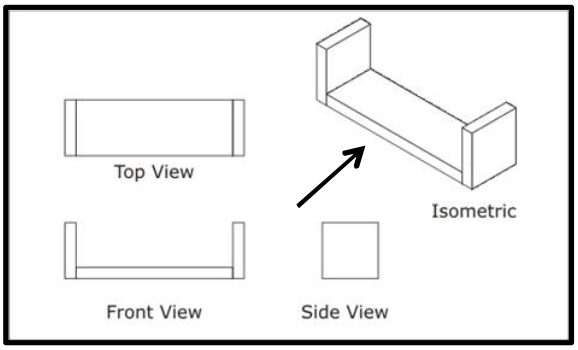
Top View
Isometric
Front View
Side View

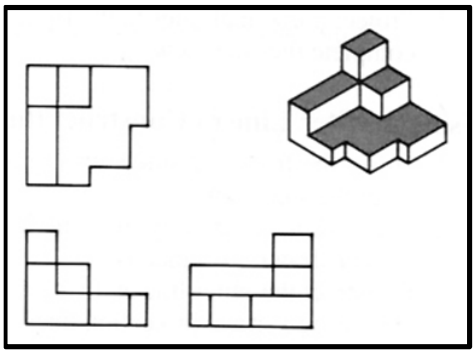

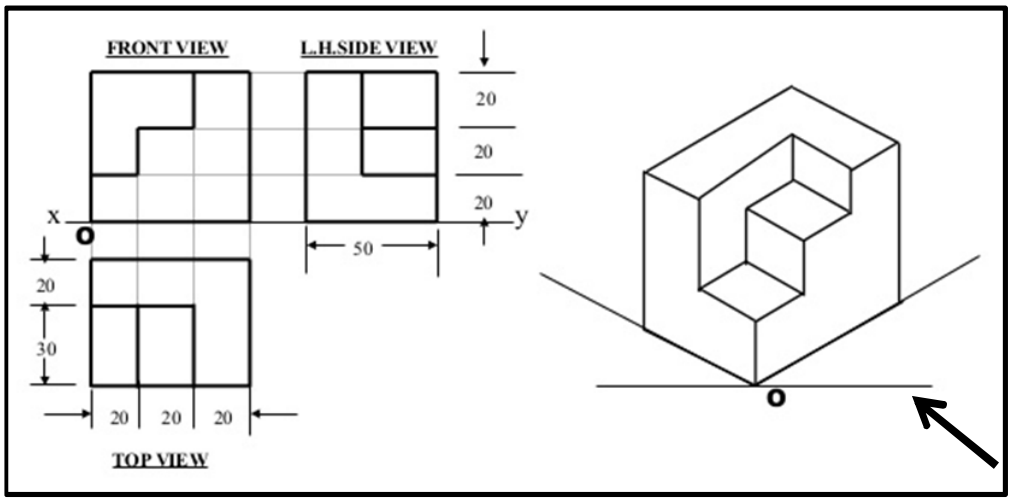
FRONT VIEW
L.H.SIDE VIEW
20
20
20
x
O
y
50
20
30
20
20
20
TOP VIEW
O

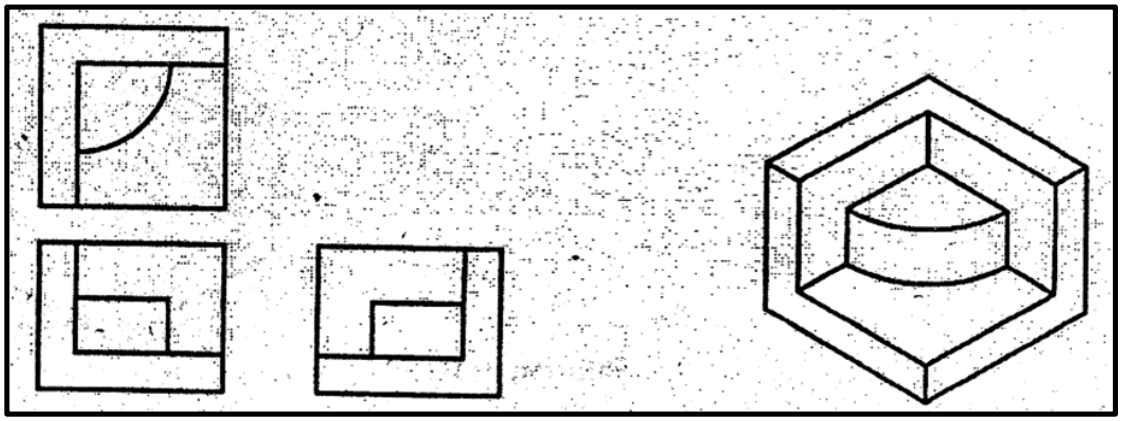

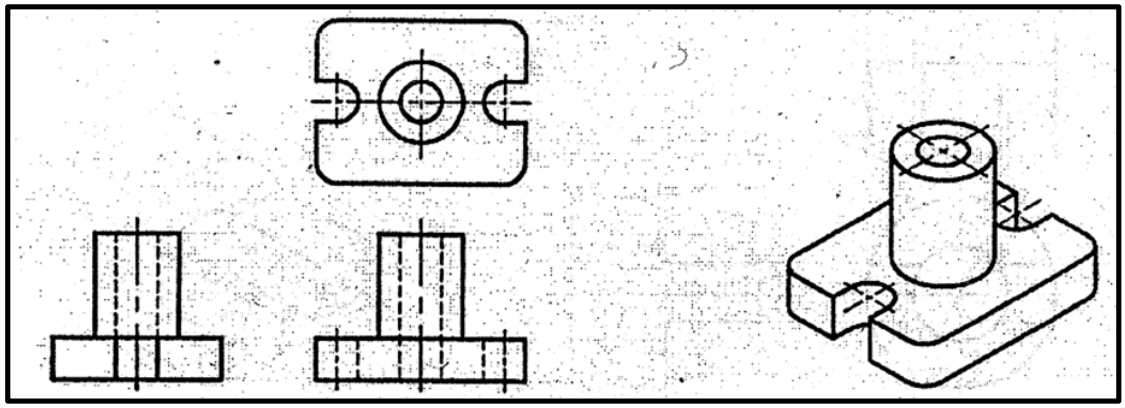

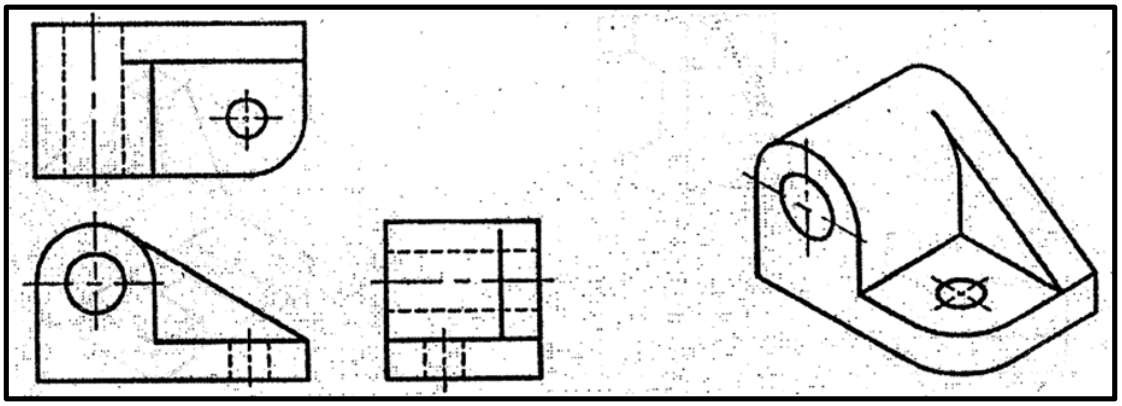

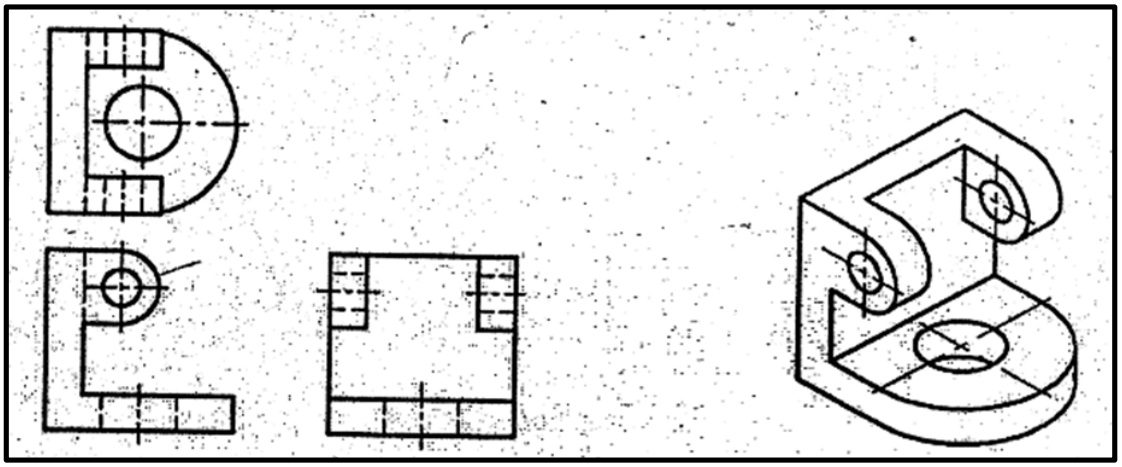

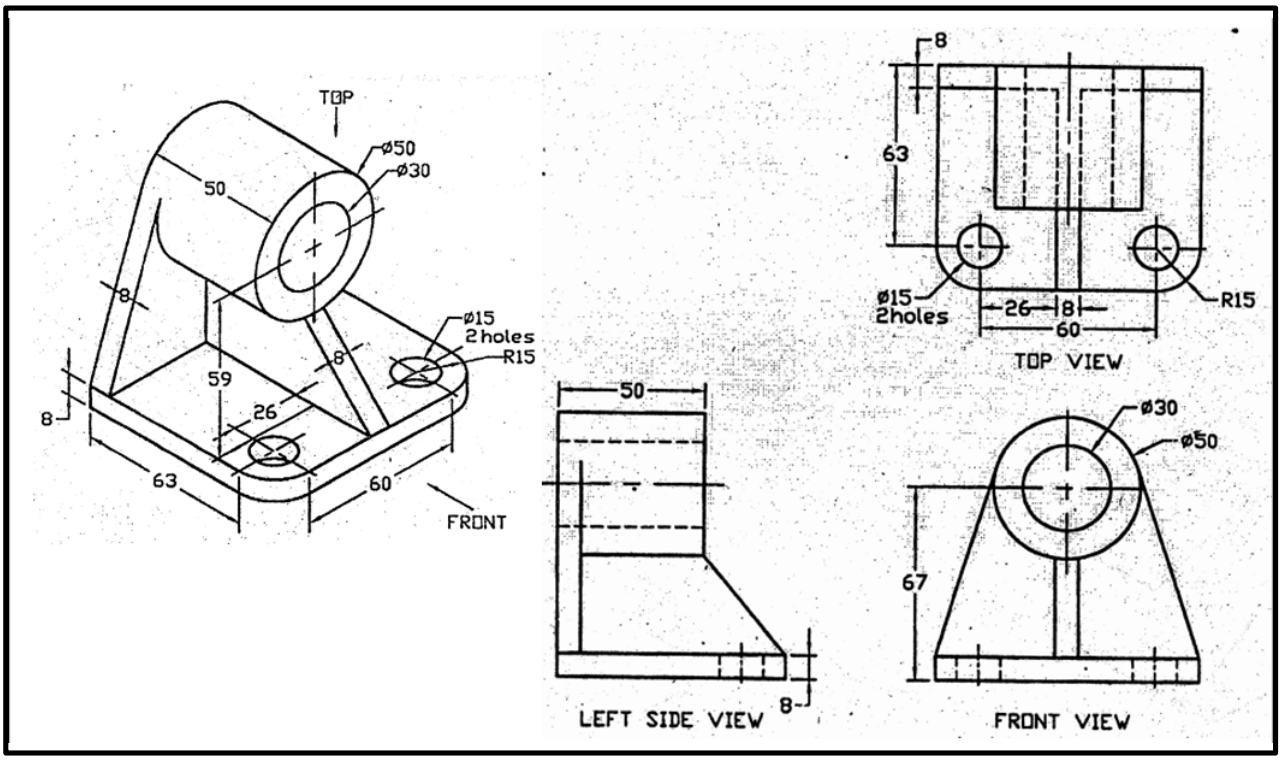
TOP
ø50
ø30
50
8
ø15
2holes
R15
59
8
26
8
63
60
FRONT
8
63
ø15
2holes
26
8
60
R15
TOP VIEW
50
8
LEFT SIDE VIEW
ø30
ø50
67
FRONT VIEW

7.3.13 Limitation of Multi View Projection

Multi view orthographic projections generally show length along two principle axis in any particular view. The length along the third axis cannot be shown in same view. This makes it difficult to understand them and only technically trained persons can understand the meaning of these orthographic views. A layman cannot imagine the shape of the object from orthographic projections.

To make the shape of an object easy to understand for both technical persons and non-technical laymen pictorial projections are used. Most commonly used pictorial drawing is Isometric drawing.

7.4 Details of Isometric Projection

Isometric means "equal measure ". Isometric projection is that type of pictorial or single view projection of object where all three principal edges (along height, width and depth) or axes are projected with equal 120° angles.

When a drawing is prepared with an isometric scale or otherwise if the object is actually projected on a plane of projection, it is an isometric projection.

7.4.1 Principle of Isometric Projection

An isometric projection is an orthographic projection, but it is obtained in such a way that all the principle axes are projected in the same view with reduction of their lengths in the same proportion. For this purpose the object is so placed that its principle axes are equally inclined to the plane of projection. In other words, the front view of a cube, resting on one of its corners is the isometric projection of the cube as shown in fig. 7.21. In comparison to orthographic projection, an object is rotated by 45^0 with respect to its front face and then tilted forward or backward by $35^016'$ and then its view is drawn and that is its isometric view. But as the object is tilted all the lengths projected on the plane appears to be shortened and thus they are drawn shortened in isometric projection.

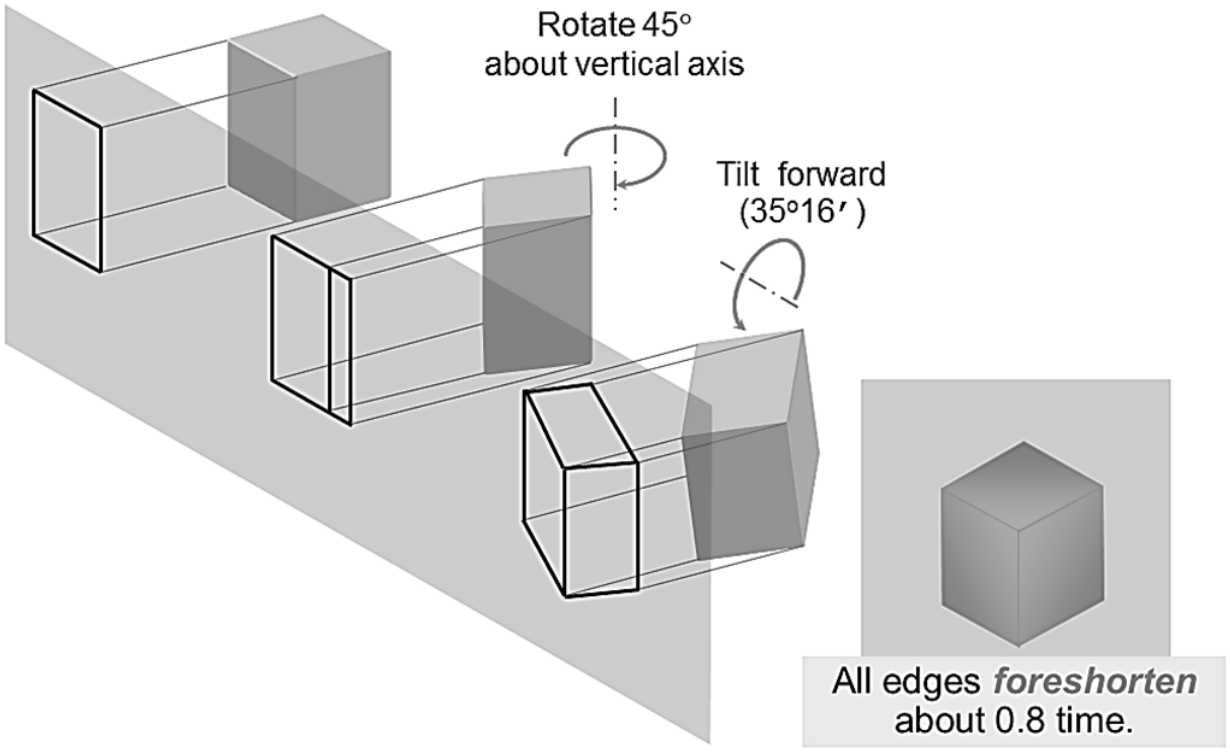

Fig. 7.18 Object Placement in Isometric Projection

7.4.2 Isometric Scale

As discussed, in case of isometric projection, due to the tilting effect a line does not project to its true length on the picture plane. In the isometric projection of a cube shown in Fig. 7.21, when the cube is tilted backward, the top face ABCD is sloping away from the observer and hence the edges of the top face will appear fore-shortened. The true shape of the triangle DAB is represented by the triangle DPB. The extent of reduction of an isometric line can be easily found by construction of a diagram called isometric scale. For this, reproduce the triangle DPA as shown in Fig. 7.22. Mark the divisions of true length on DP. Through these divisions draw vertical lines to get the corresponding points on DA. The divisions of the line DA give dimensions to isometric scale. From the triangle ADO and PDO in Fig. 7.21, the ratio of the isometric length to the true length,

$$\frac{DA}{DP} = \frac{\cos 45°}{\cos 30°} = 0.816$$

In words, the isometric axes are reduced in the ratio 1: 0.816 or 82% approximately.

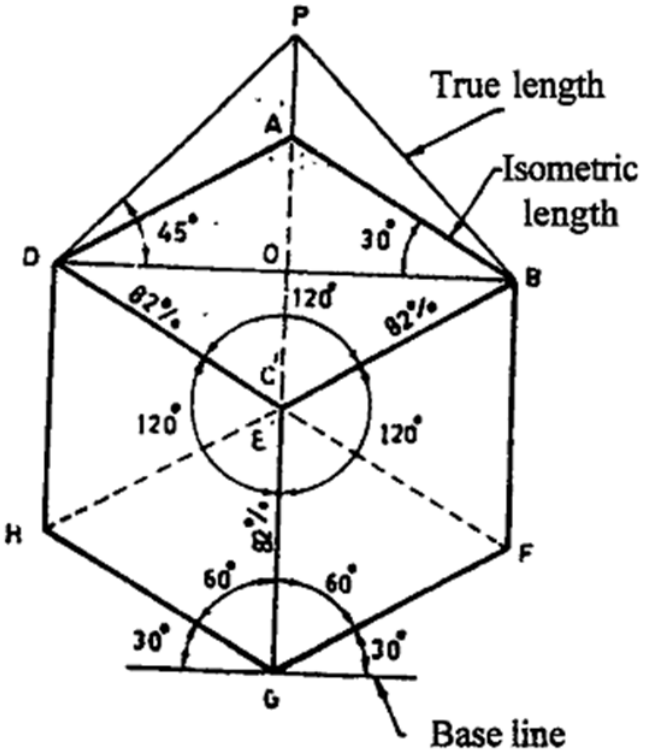

Fig. 7.19 Isometric Projection of a Cube

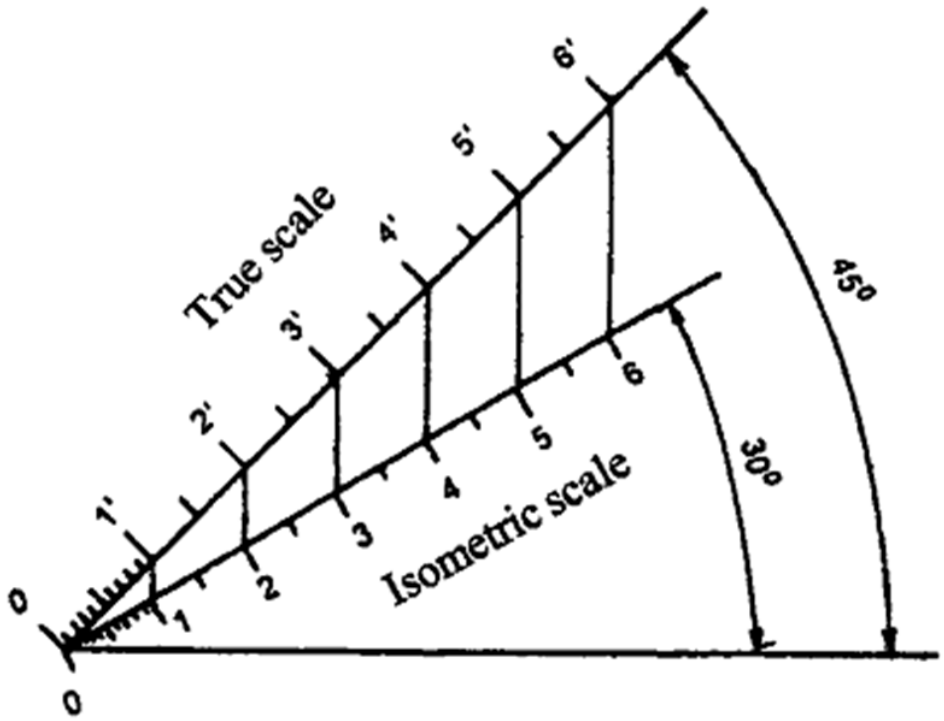

Fig. 7.20 Isometric Scale

7.4.3 Lines in Isometric Projection

The following are the rules for presenting the lines in isometric projection:

1. The lines that are parallel on the object are parallel in the isometric projection.
2. Vertical lines on the object appear vertical in the isometric projection.
3. Horizontal lines on the object are drawn at an angle of 30° with the horizontal in the isometric projection.
4. A line parallel to an isometric axis is called an isometric line and it is foreshortened to 82%.
5. A line which is not parallel to any isometric axis is called non-isometric line and the extent of fore-shortening of non-isometric lines is different if their inclinations with the vertical planes are different.

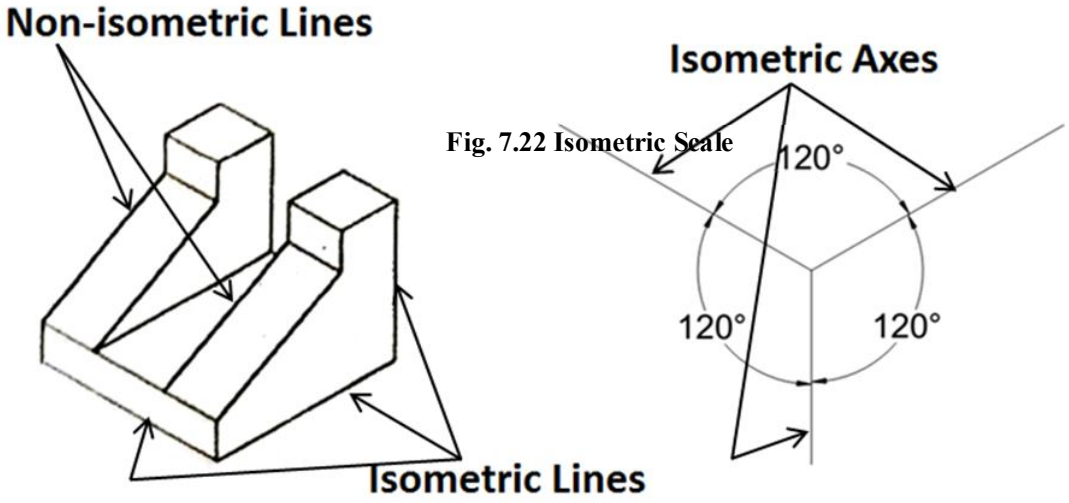

Fig. 7.22 Isometric Scale

Fig. 7.21 Lines and Axes in Isometric Projection

7.4.4 Isometric Drawing

When an isometric projection is prepared with an ordinary scale, it is called an isometric drawing. Drawing of objects is seldom drawn in true isometric projections, as the use of an isometric scale is inconvenient. Instead, a convenient method in which the foreshortening of lengths is ignored and actual or true lengths are used to obtain the projections, is applied which is called isometric drawing or isometric view. This is advantageous because the measurement may be made directly from a drawing.

The isometric drawing is 22.5% larger than the isometric projection, but the pictorial value is obviously the same in both. An isometric drawing is so much easier to execute and, for all practical purposes, is just as satisfactory as the isometric projection.

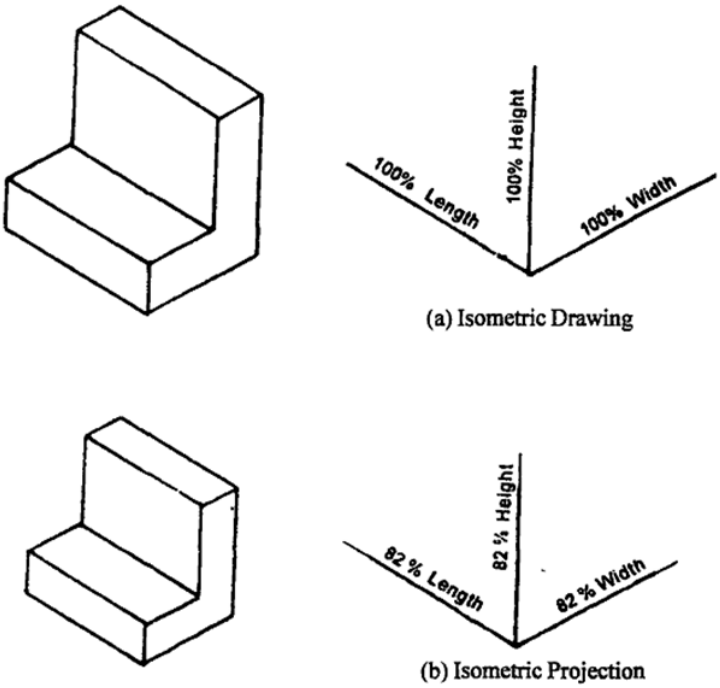

Fig. 7.22 Isometric Drawing and Isometric Projection

7.4.5 Methods of Constructing Isometric Drawing

The methods used are:

1. Box method.
2. Off-set method.

In both the methods it must be always kept in mind that in isometric projection, vertical lines are drawn vertical and the horizontal lines are drawn inclined 30° to the base line.

7.4.5.1 Box Method

When an object contains a number of non-isometric lines, the isometric drawing may be conveniently constructed by using the box method. In this method, the object is imagined to be enclosed in a rectangular box and both isometric and non-isometric lines are located by their respective points of contact with the surfaces and edges of the box. It is always helpful to draw or imagine the orthographic views first and then proceed for isometric drawing. Fig. 7.24 illustrates an example isometric drawing by box method.

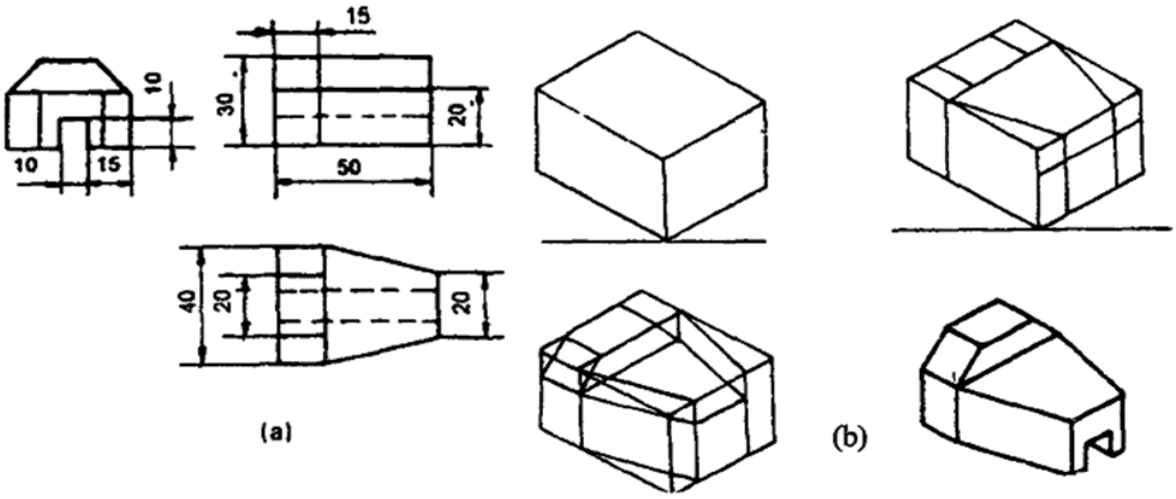

Fig. 7.23 Isometric Drawing by Box Method

7.4.5.2 Off-set Method

Off-set method of making an isometric drawing is preferred when the object contains irregular curved surfaces. In the off-set method, the curved feature may be obtained by plotting the points on the curve, located by the measurements along isometric lines. Fig. 7.25 illustrates the application of this method.

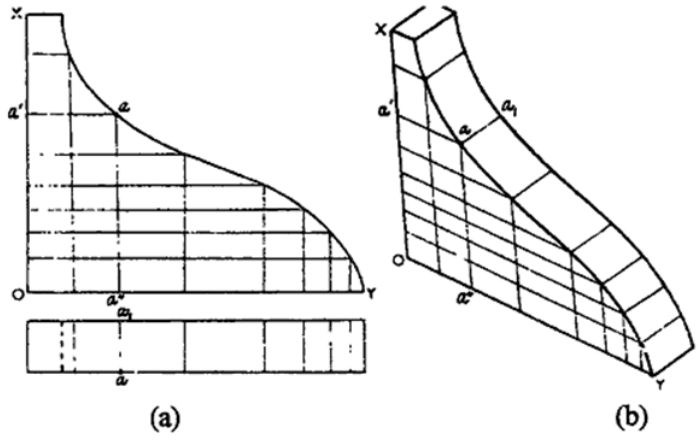

Fig. 7.24 Isometric Drawing by Off-set Method

7.4.6 Isometric Drawing of planes

Isometric drawing of planes can be obtained simply by keeping in mind that vertical lines will be vertical in projection and horizontal lines will be at 30^0 inclined in projection. If there are some inclined lines in the plane it will be helpful to enclose the plane with a rectangle and then obtain the projection with reference to the sides of that rectangle.

7.4.6.1 Isometric Drawing of Rectangular Plane

Let us draw the isometric drawing of a rectangle of 100mm and 70mm sides if its plane is Vertical and Horizontal.

When the plane is vertical

- ✓ **Step 1:** Draw the given rectangle ABCD as shown in Fig. 7.26 (a)
- ✓ **Step 2:** Draw the side A D inclined at 30° to the base line as shown in Fig. 7.26 (b) and mark A D = 70mm.
- ✓ **Step 3:** Draw the verticals at A and D and mark off A B = D C = 100mm on these verticals.
- ✓ **Step 4**: Join BC which is parallel to AD. ABCD is the required isometric projection. This can also be drawn as shown in Fig. 7.26(c). Arrows show the direction of viewing.

When the plane is horizontal

- ✓ Draw the sides AD and DC inclined at 30° to be base line and complete the isometric projection ABCD as shown in Fig.9.IOd. Arrow at the top shows the direction of viewing.

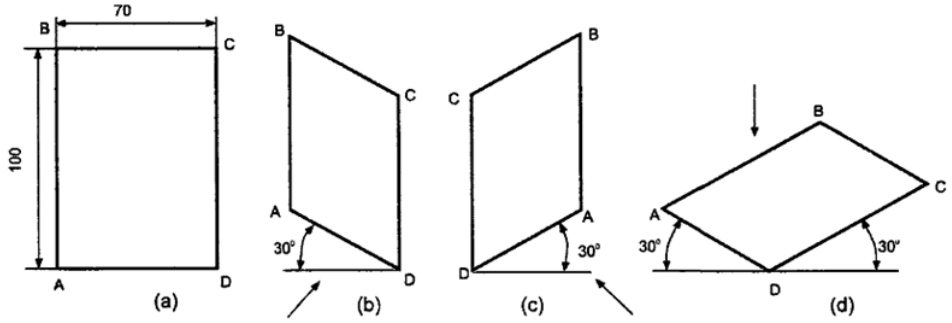

Fig. 7.25 Isometric Drawing of Rectangular Plane

7.4.6.2 Isometric Drawing of Pentagonal Plane

Let us draw the isometric drawing of a regular pentagon of 25mm sides if its plane is Vertical and Horizontal.

- ✓ **Step 1:** Draw the given pentagon abcde and enclose it by a rectangle 1234 as shown in Fig. 7.27 (a).
- ✓ **Step 2:** Make the isometric drawing of the rectangle 1234 as described in fig. 7.26.
- ✓ **Step 3:** On the isometric drawing of rectangle locate the points A and B such that 1A = 1a and 1B = 1b.
- ✓ **Step 4:** Similarly locate points C, D and E such that 2C = 2c, 3D = 3d and 4E = 4e.
- ✓ **Step 4**: Join A, B, C, D, E sequentially; Now ABCDE is the required isometric view in vertical plane as shown in fig. 7.27 (b). Similarly the fig. 7.27 (c) can be obtained for horizontal plane.

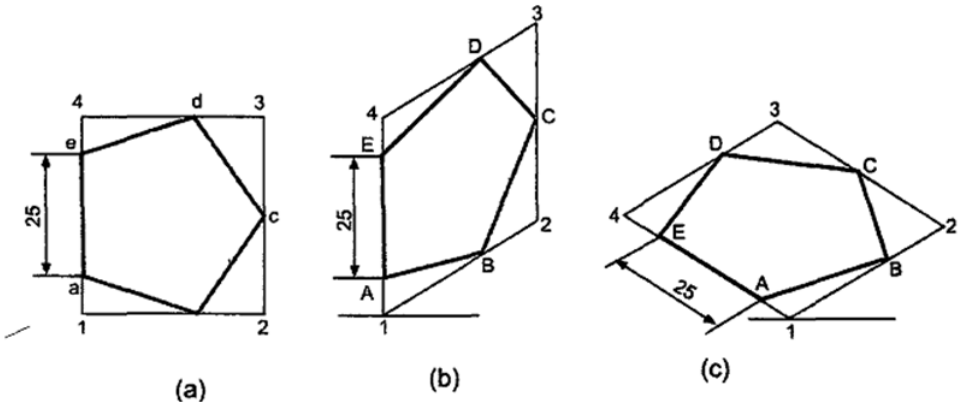

Fig. 7.26 Isometric Drawing of Pentagonal Plane

7.4.6.3 Isometric Drawing of a Circular Plane

Let us draw the isometric drawing of a circle of 60mm radius if its surface is vertical and horizontal.

- ✓ **Step 1:** Draw the given circle and enclose it by a square 1234 as shown in Fig. 7.28 (a).
- ✓ **Step 2:** Make the isometric drawing of the square 1234 that will form a rhombus.
- ✓ **Step 3:** Mark the mid-points A, B, C and D of each sides of the rhombus as shown in fig 7.28 (b).
- ✓ **Step 4:** Draw longest diagonal 2-4 and join point 3 and A. The line 3-A will intersect the line 2-4 at point M. Similarly obtain the intersecting point N.
- ✓ **Step 5:** With center M and radius MA draw an arc AB. With center N and radius NC draw and arc CD.
- ✓ **Step 6:** With center 1 and radius 1-C draw an arc BC. With center 3 and radius 3-D draw an arc AD.
- ✓ **Step 7:** The ellipse ABCD is the required isometric drawing of the circle on horizontal plane. Similarly the isometric views can be obtained on vertical planes as shown in fig. 7.28 (c)

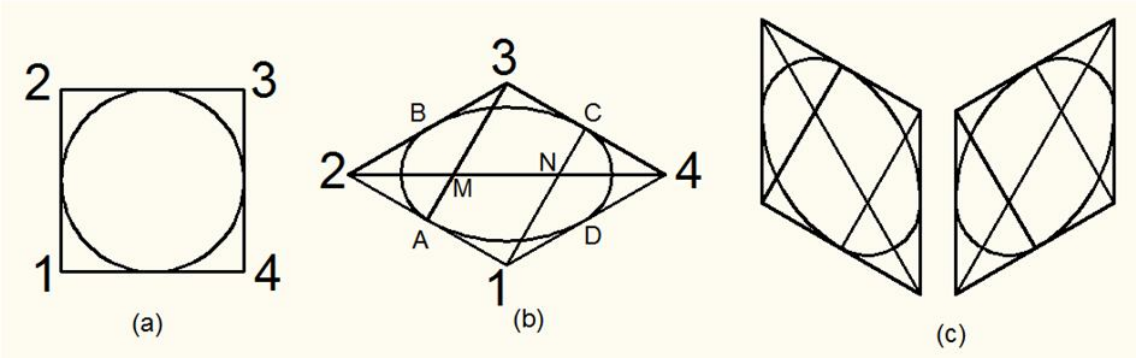

Fig. 7.27 Isometric Drawing of Circular Plane

7.4.7 Isometric Drawing of Solids

Before drawing of an isometric view of a solid object it is always convenient to draw the orthographic views first. Then the isometric box is constructed and the orthographic views are reproduced on the respective faces of the box. Finally by joining the points relating to the object and erasing unnecessary lines the isometric view is obtained.

7.4.7.1 Points to be Remembered for Isometric drawing

- ✓ Three isometric axes will be at 120^0 angle with each other.
- ✓ Height will be along vertical isometric axis.
- ✓ Length and width will be along isometric axes each being 30^0 inclined with horizontal.
- ✓ Isometric lines will be in their true length.
- ✓ Non-isometric lines will be either in enlarged or reduced length.
- ✓ No hidden line will be shown in isometric drawing unless necessary.

7.4.8 Steps for Drawing Isometric View

Let us draw isometric view of a solid object as shown in fig. 7.30 (a)

- ✓ **Step -1:** Draw the orthographic views. In a specific isometric drawing three maximum faces can be shown. Usually front view, top view and either left or right side view are selected.
- ✓ **Step -2:** Draw three isometric axes. Use set square to make 30^0 angles.
- ✓ **Step -3:** Cut corresponding distances equal to major (maximum) length, width and height of object from each isometric axis. Remember to cut height along vertical isometric axis. Choose length and width according to given/chosen views. If right side view is given/chosen, then length of front view should be chosen along the left side axis of vertical axis so as to allow drawing of right side view along right side axis.
- ✓ **Step -4:** Draw an isometric box. To do this, draw 2 parallel lines of each isometric axis at the end points of other two axes.
- ✓ **Step -5:** Draw given views (front, top and left/right) on the corresponding face of the isometric box.

- ✓ **Step -6:** Look through the individual views and identify non-existing lines and surfaces. Erase the non-existing lines. While erasing a line, take the question in mind "why I have drawn this earlier?" If you erase a line from isometric box, there must be a visible line parallel to that line.
- ✓ **Step -7:** Finally, darken the visible lines. Compare the orthographic views with your obtained Isometric views. Check if any logical line/surface is missing. If not, you are done.

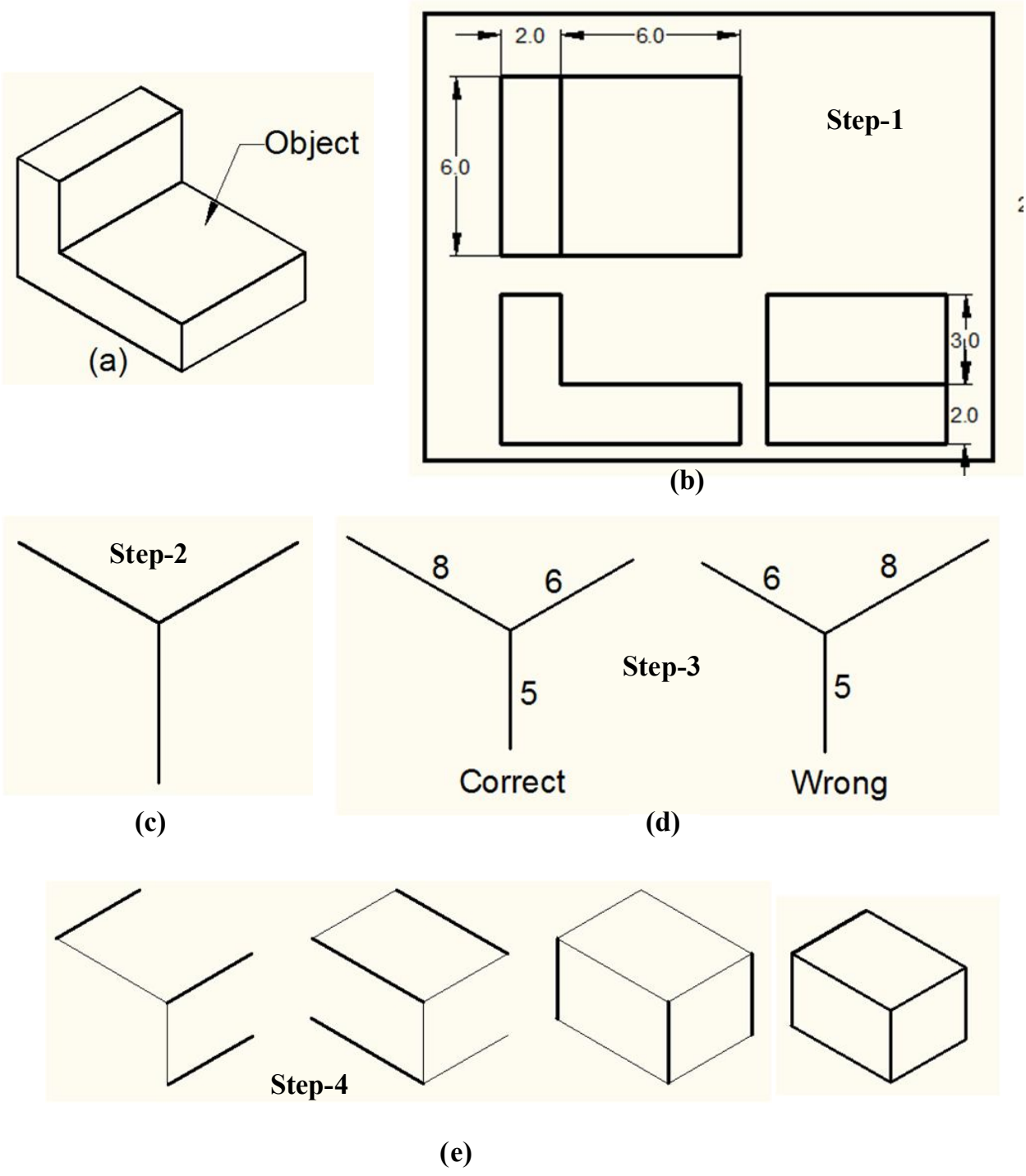

Fig. 7.28 Steps for Isometric Drawing of Solid Object (Contd.)

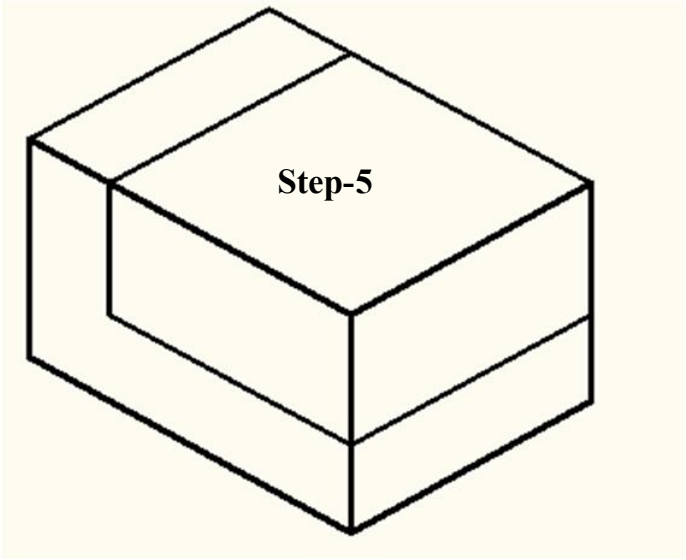

(f)

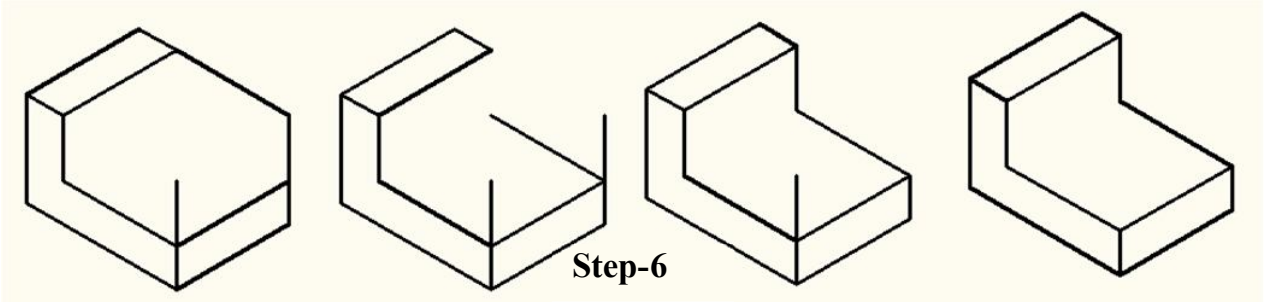

(g)

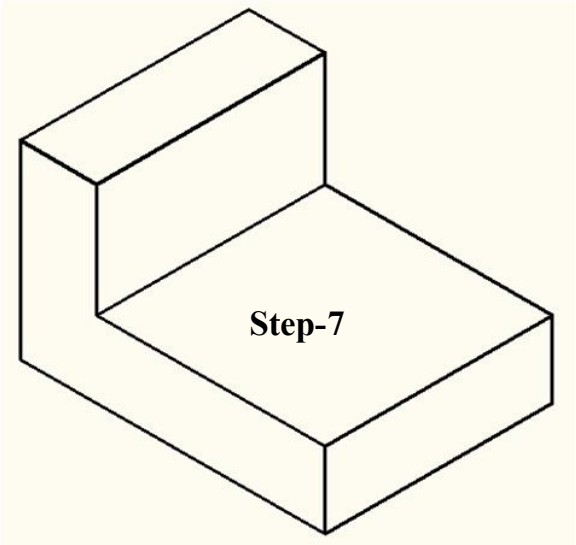

(h)

Fig. 7.28 Steps for Isometric Drawing of Solid Object (Contd.)

7.4.9 Worked-out Examples of Isometric Drawing

1. Draw isometric view from the orthographic views given in figures below:

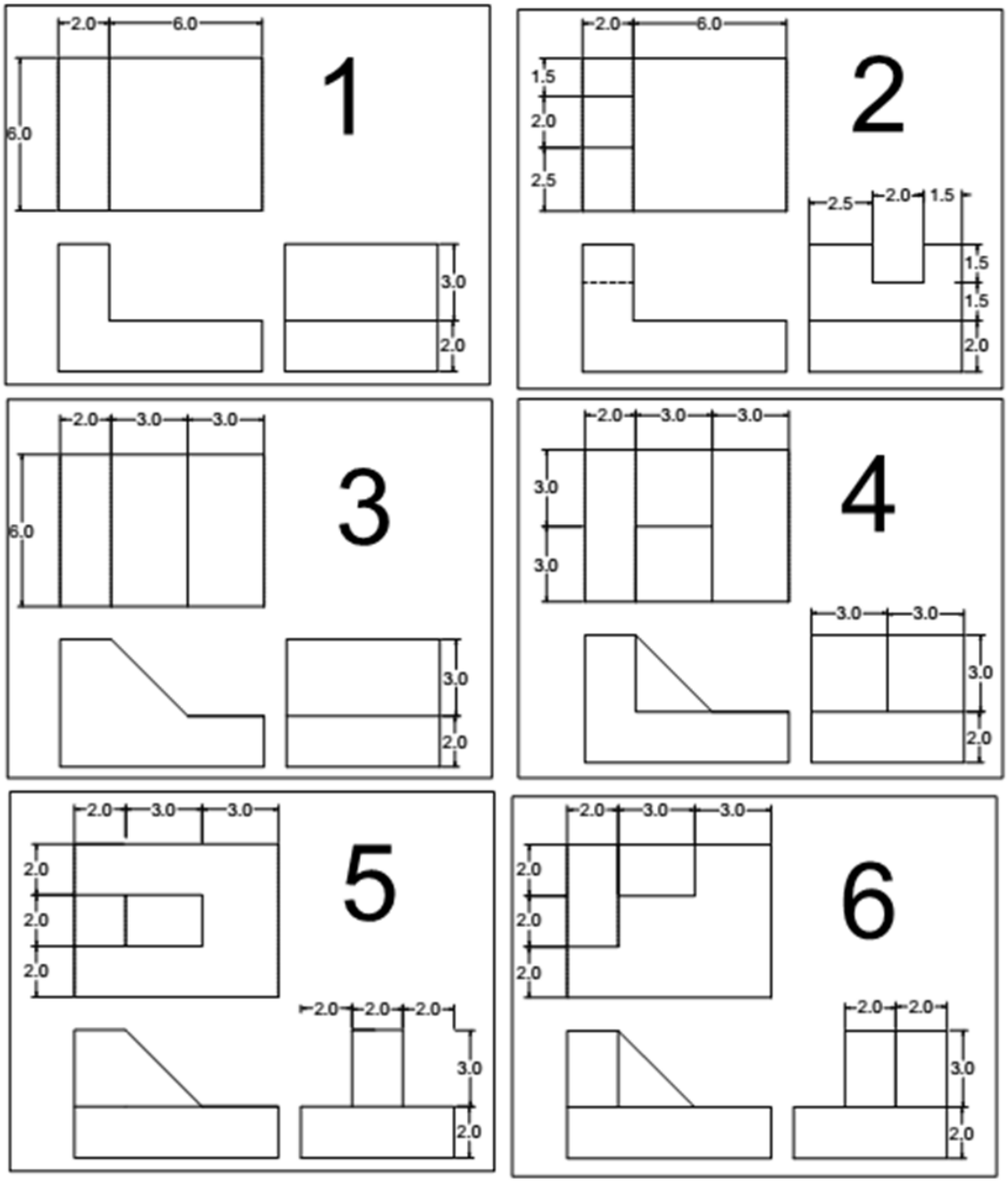

Solution:

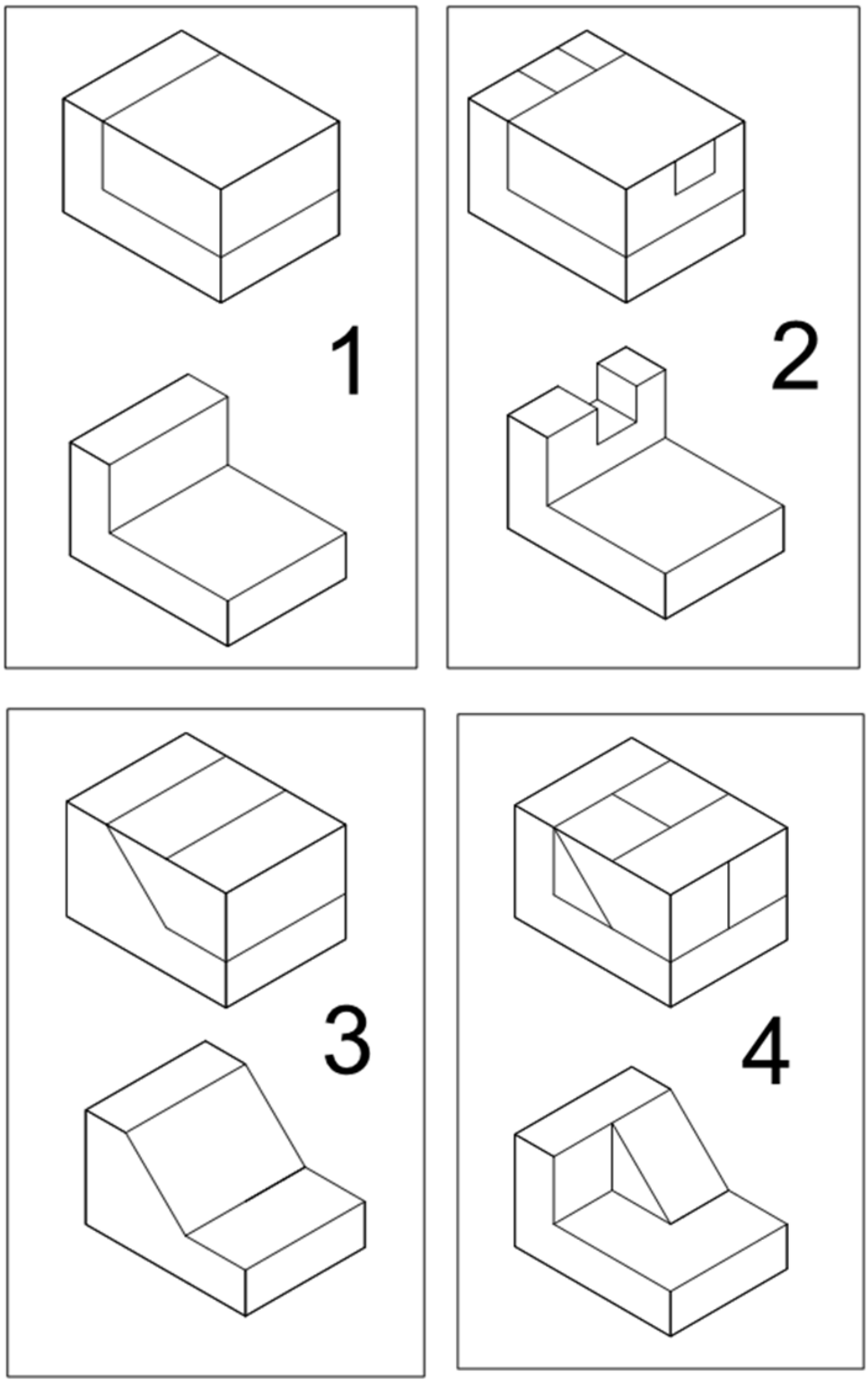

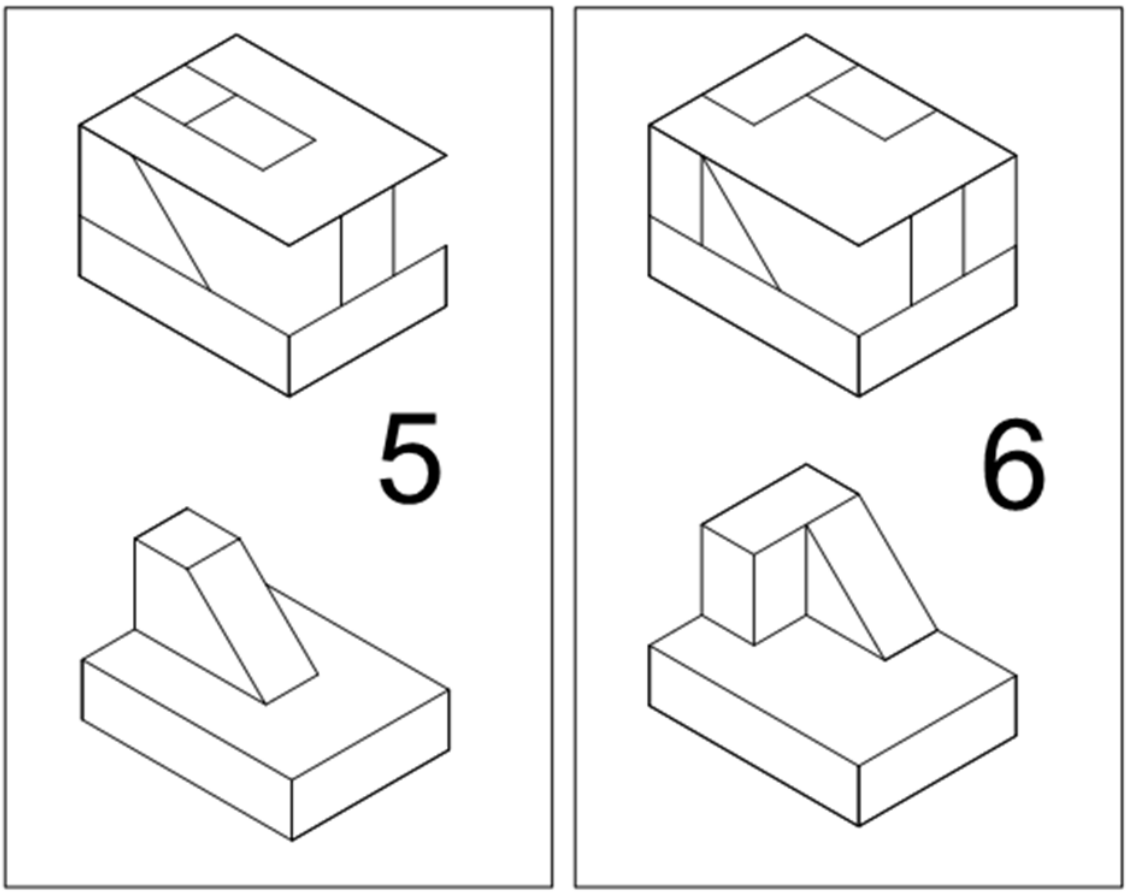

See section 7.3.12 for more examples.

2. Draw isometric view of a hexagonal prism 30mm sides and 60mm height.

Solution:
Draw the orthographic views first. Following section 7.4.7.2, complete the projection. For projecting the hexagonal top view on the top face of isometric box follow section 7.4.6.2.

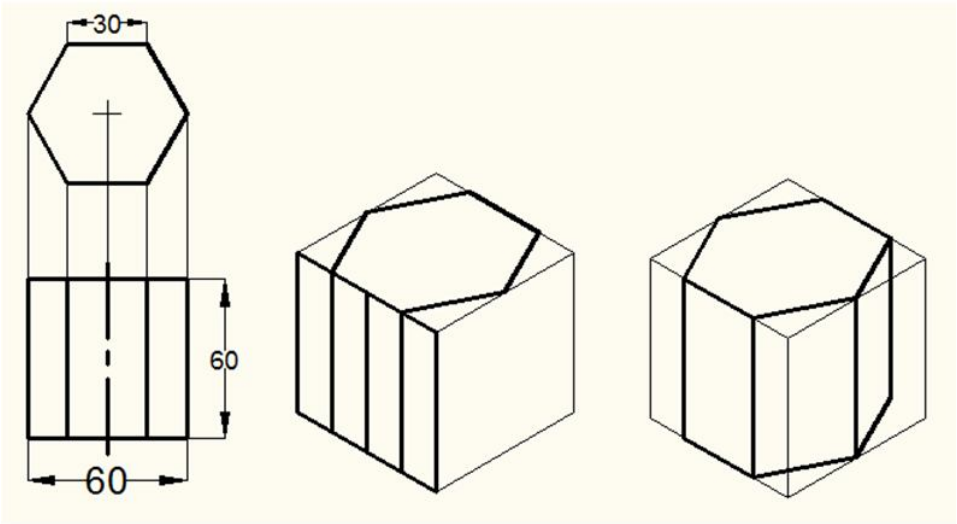

3. Draw isometric view of a cone with base diameter 30mm and axis 50 mm long.

Solution:

Draw the orthographic views first. Following section 7.4.7.2, complete the projection. For projecting the circular top view on the top face of isometric box follow section 7.4.6.3.

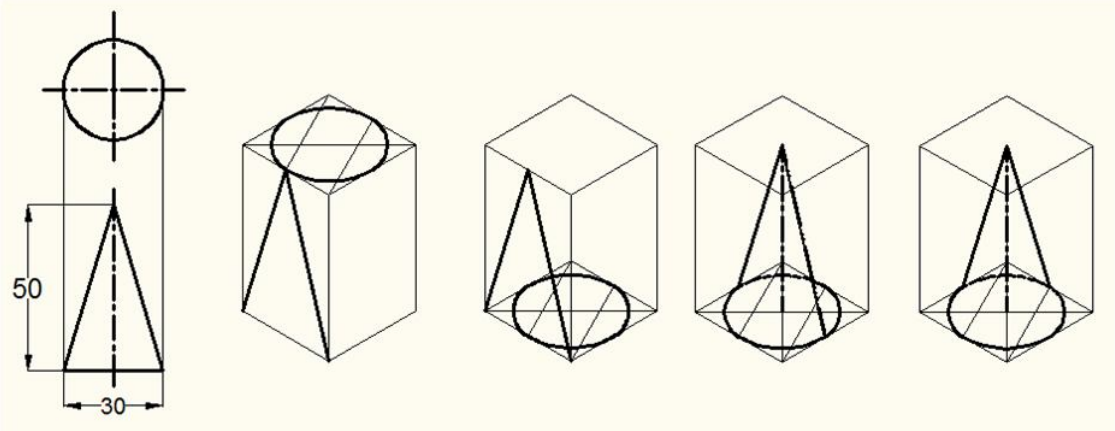

Exercise and Assignments:

1. Draw orthographic views of the following objects (wooden objects available):

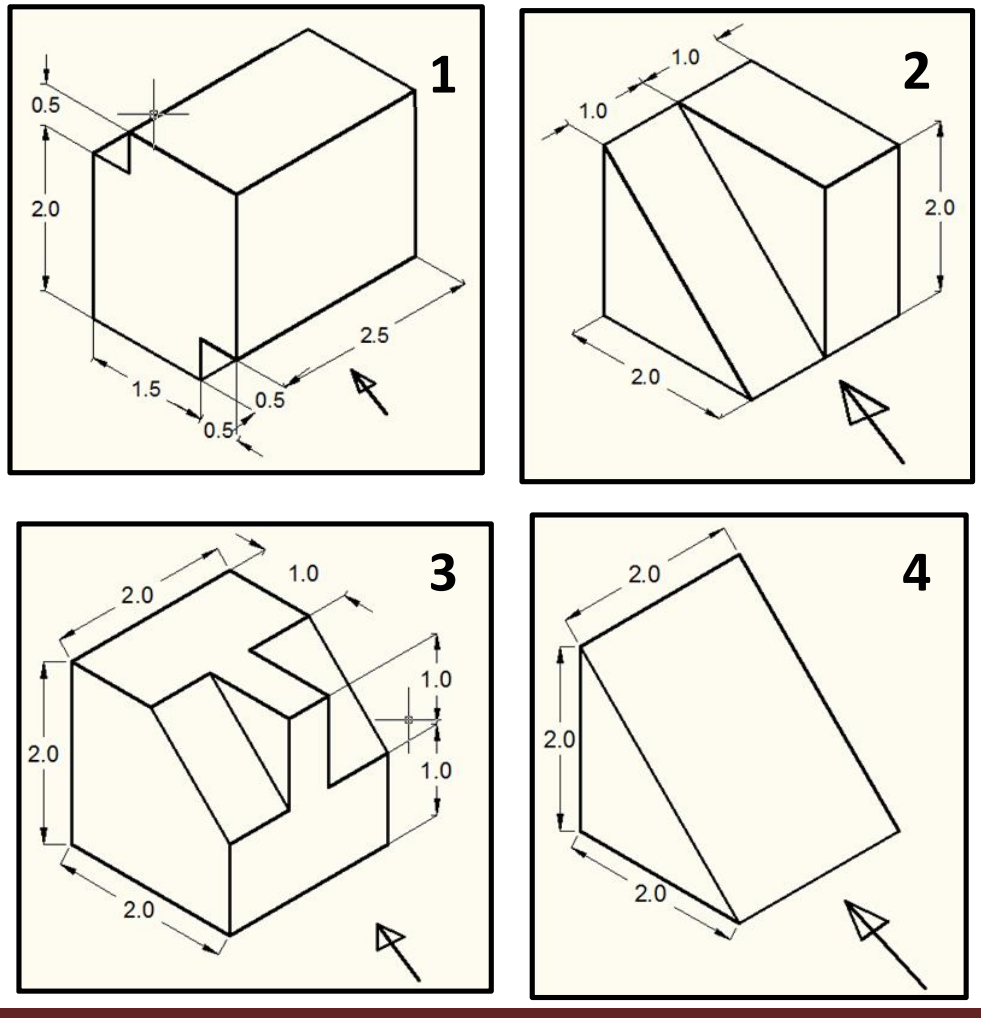

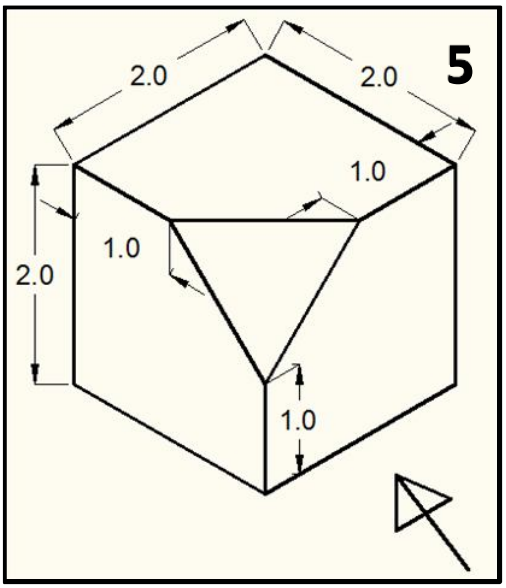
5
2.0
2.0
1.0
1.0
2.0
1.0

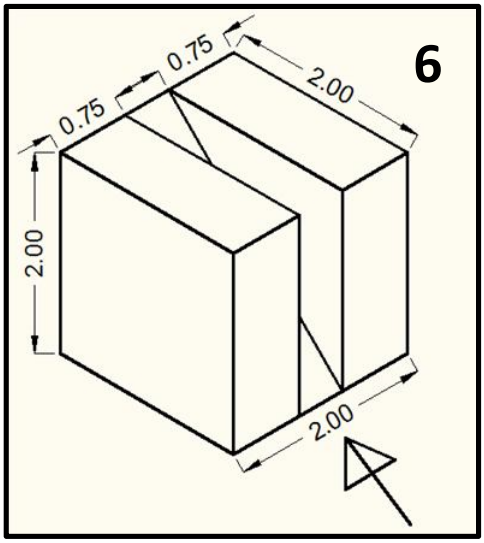
6
0.75
0.75
2.00
2.00
2.00

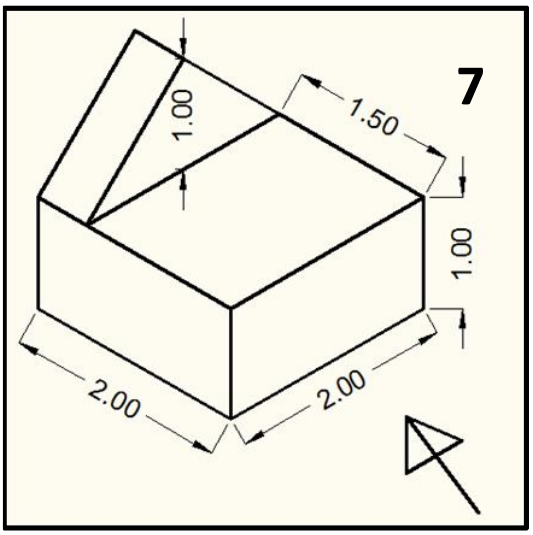
7
1.00
1.50
1.00
2.00
2.00

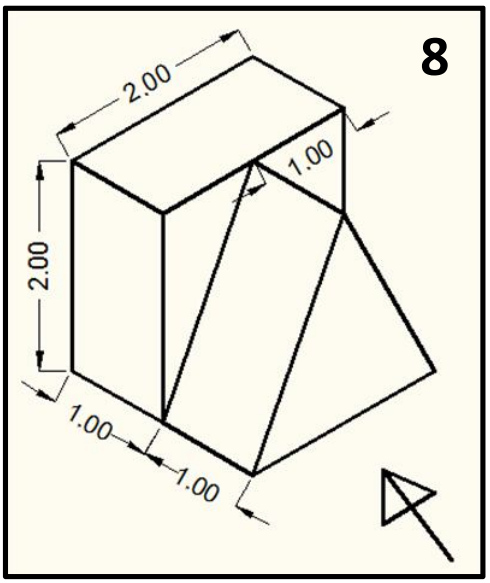
8
2.00
1.00
2.00
1.00
1.00

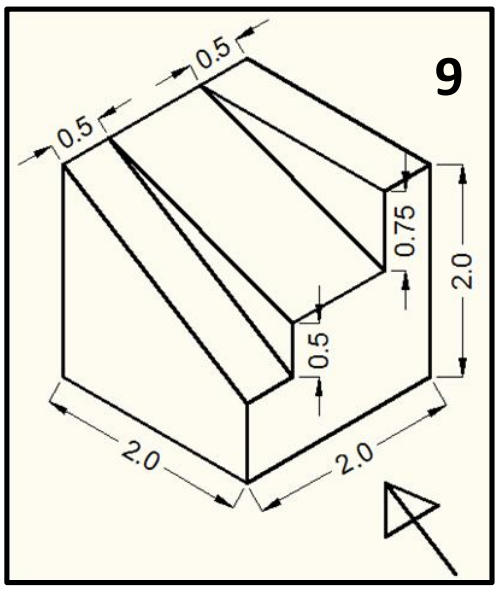
9
0.5
0.5
0.75
2.0
0.5
2.0
2.0

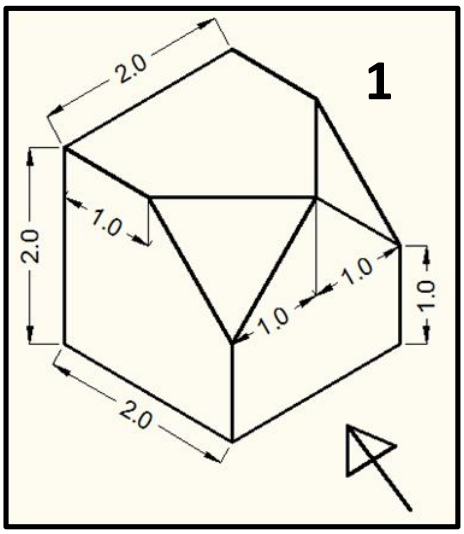
1
2.0
1.0
2.0
1.0
1.0
1.0
2.0

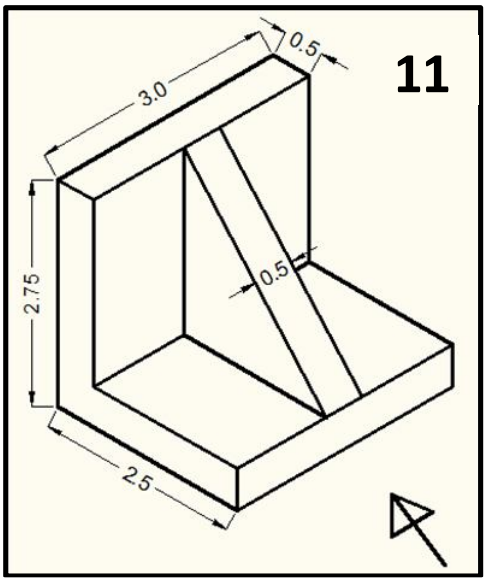

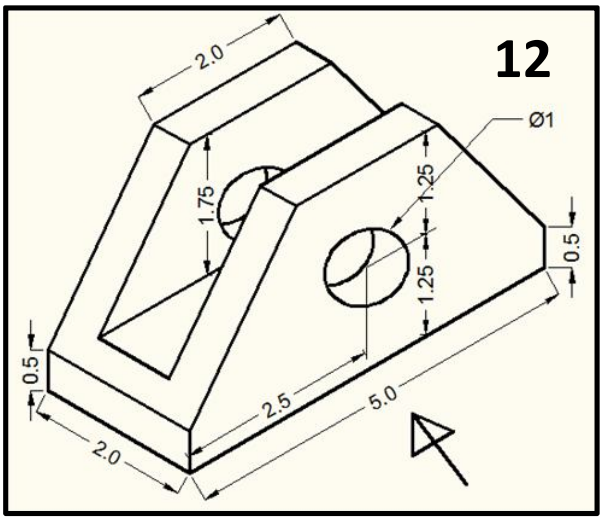

2. Draw orthographic views for the following pictorial views (Assume arbitrary dimension):

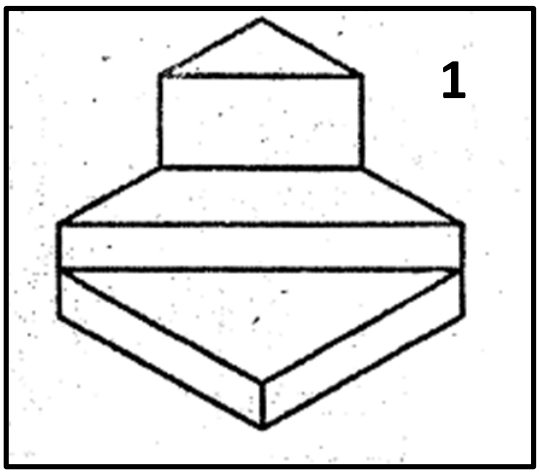

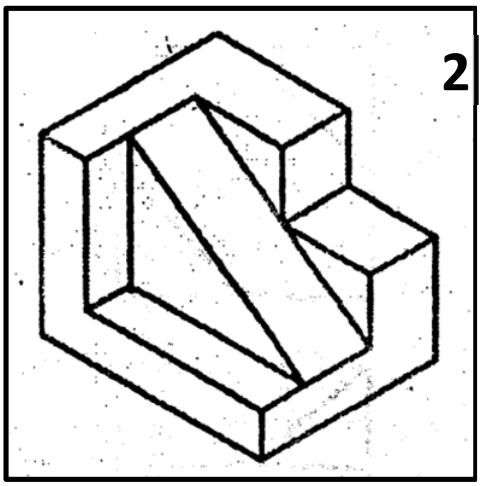

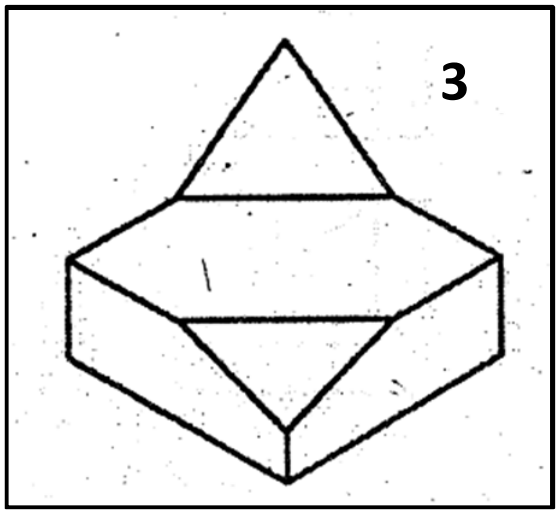

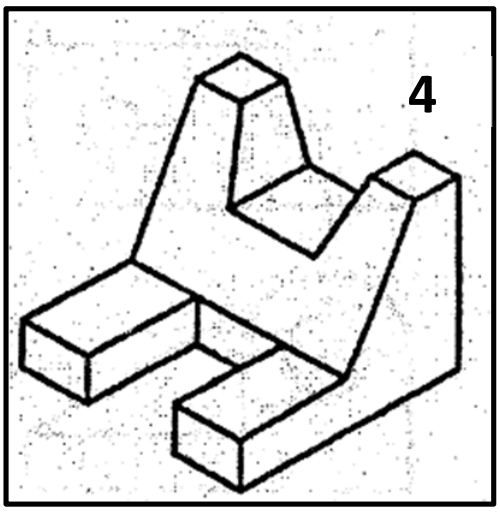

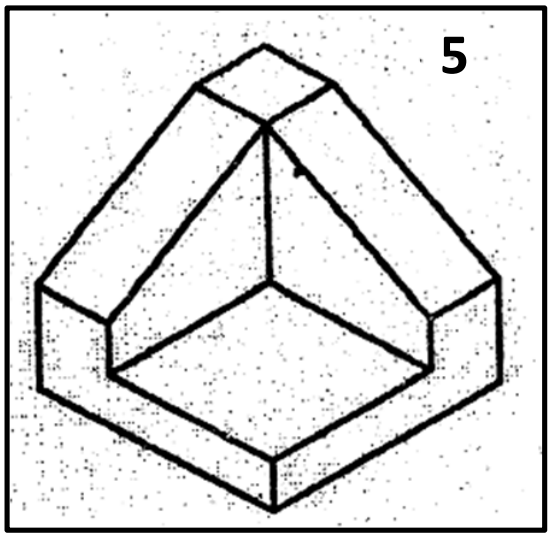
5

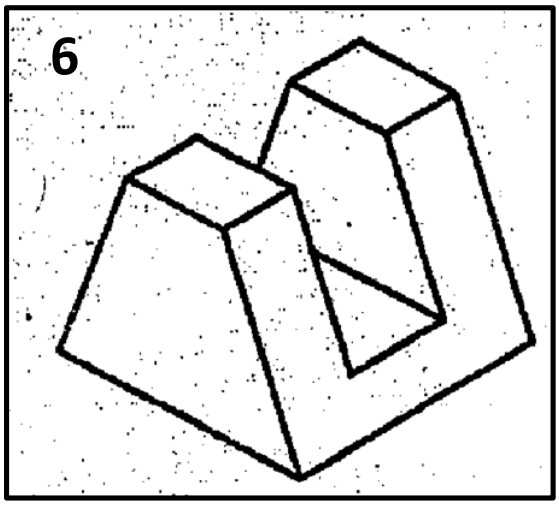
6

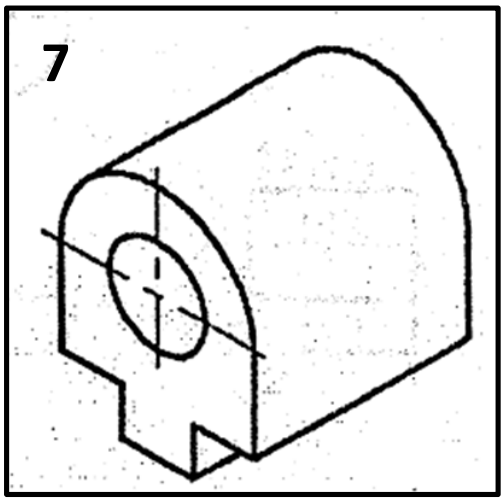
7

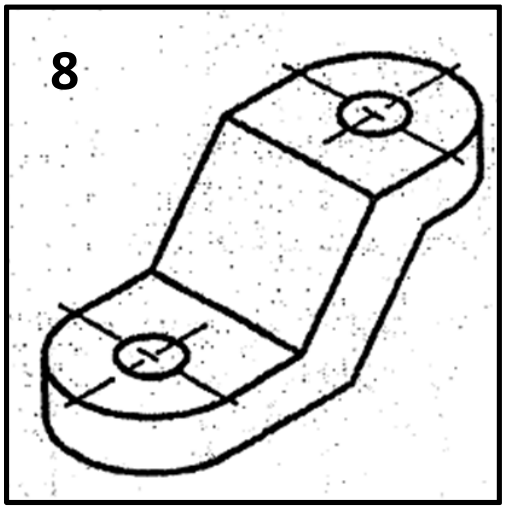
8

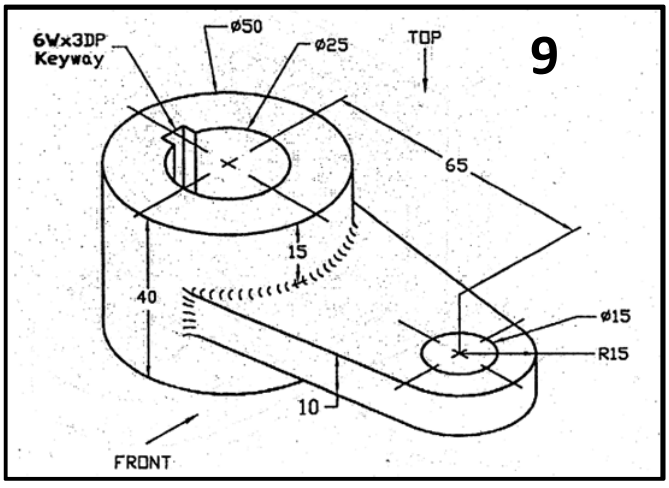
9
6Wx3DP
Keyway
ø50
ø25
TOP
65
15
40
ø15
R15
10
FRONT

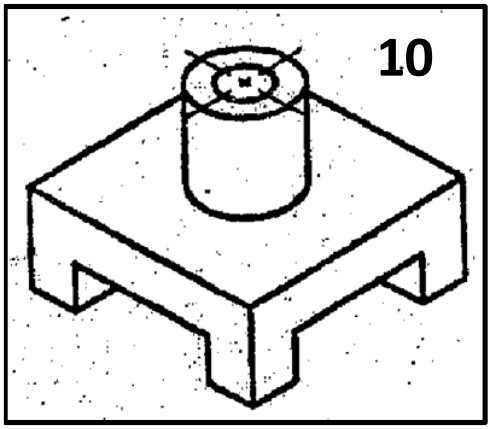
10

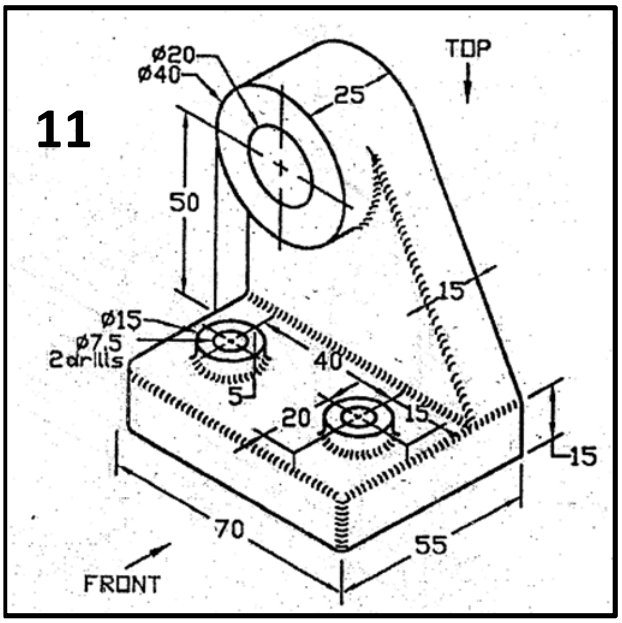

3. Draw necessary orthographic views to represent
    i. A reading table
    ii. Sitting chair
    iii. Twin seats of university bus.
    iv. Laptop computer
    v. Wall clock.
    vi. Refrigerator.
    vii. D-box of HSTU.
    viii. A pentagonal pyramid.
    ix. A Cylindrical pen holder.
    x. An oval shaped paper-weight.

4. Draw isometric view of a rectangular plane having length of sides as 10 cm and 15 cm when its plane is (a) horizontal and (b) vertical.
5. Draw isometric view of a square prism with a side of base 5cm and axis 15 cm long when the axis is (a) vertical and (b) horizontal.
6. Draw isometric view of a cylinder with base diameter 10cm and axis 15 cm long.
7. A pentagonal pyramid of side of base 30mm and height 70mm is resting with its base on horizontal plane. Draw the isometric drawing of the pyramid.
8. Draw isometric views of
    i. A reading table
    ii. Sitting chair
    iii. Twin seats of university bus.
    iv. Laptop computer
    v. Wall clock.
    vi. Refrigerator.
    vii. D-box of HSTU.
    viii. A pentagonal pyramid.
    ix. A Cylindrical pen holder.
    x. An oval shaped paper-weight.

9. Prepare isometric drawing from the given orthographic views. (Use assumed value for missing dimensions)

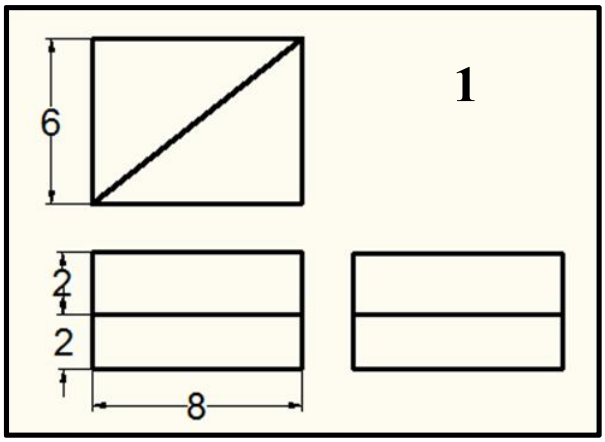

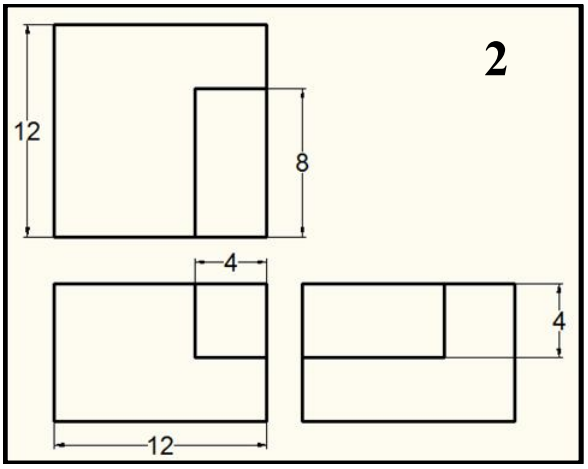

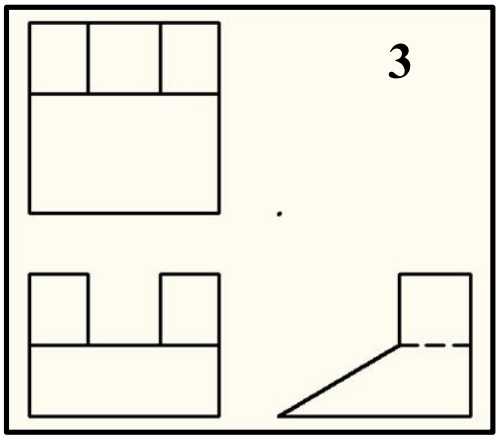

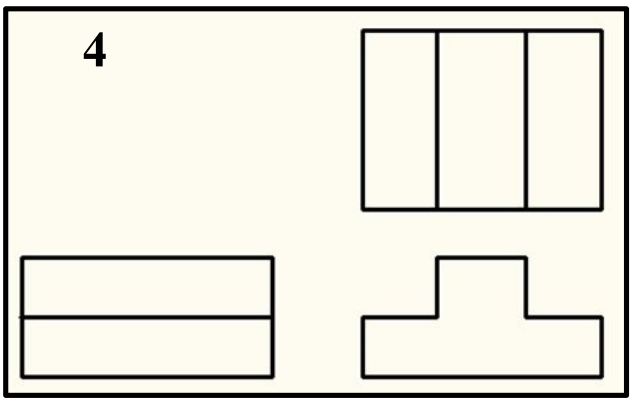

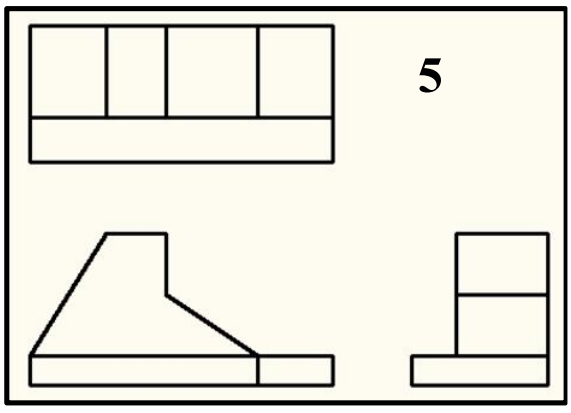

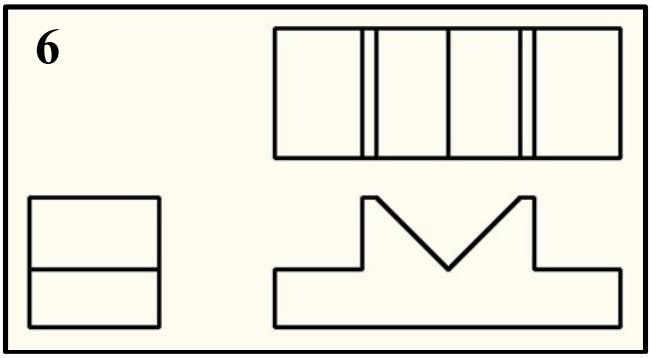

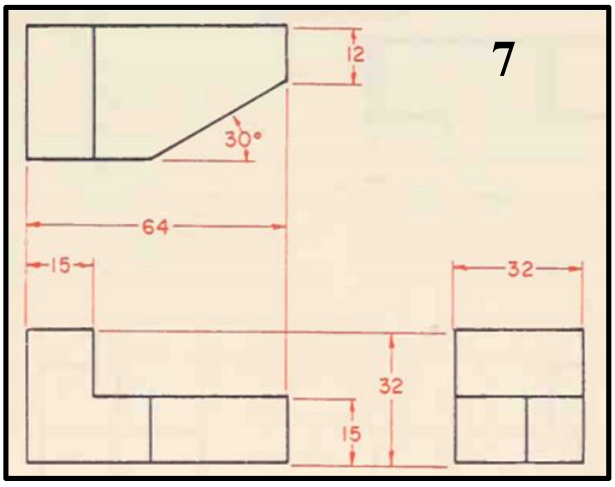
7
12
30°
64
15
32
32
15

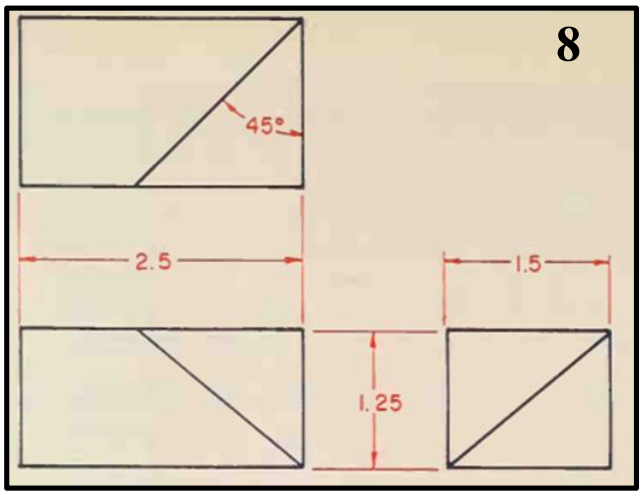
8
45°
2.5
1.5
1.25

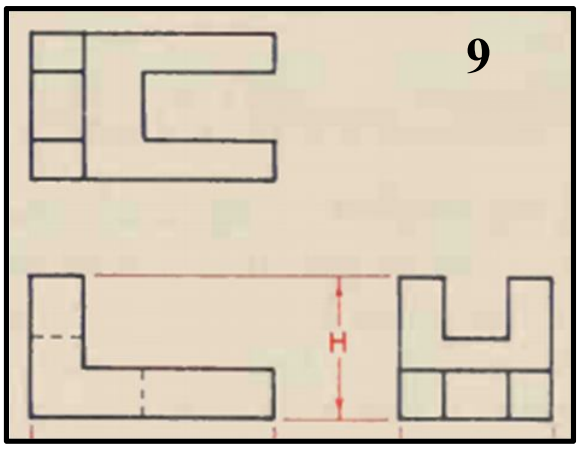
9
H

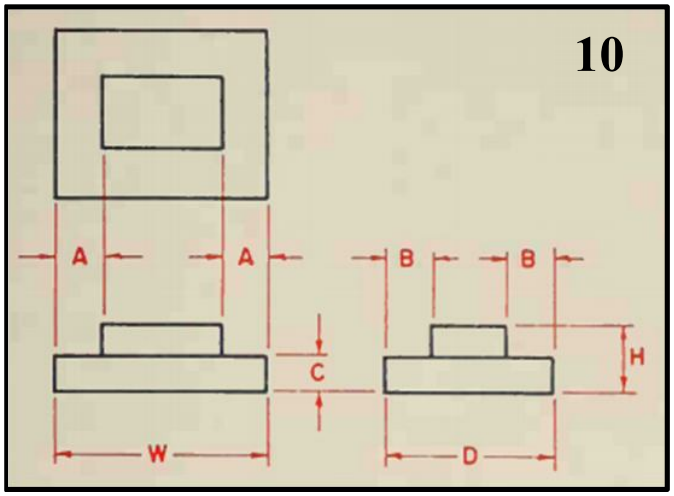
10
A
A
B
B
H
C
W
D

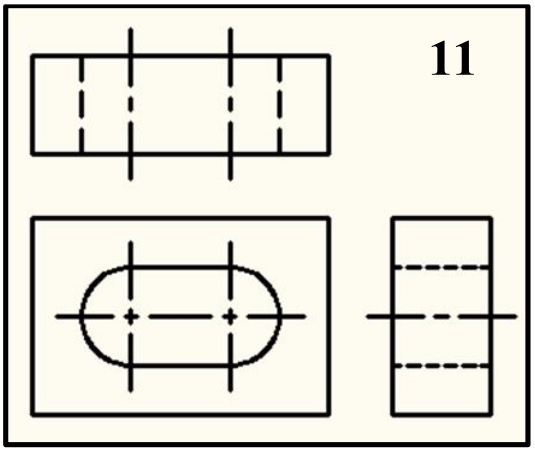
11

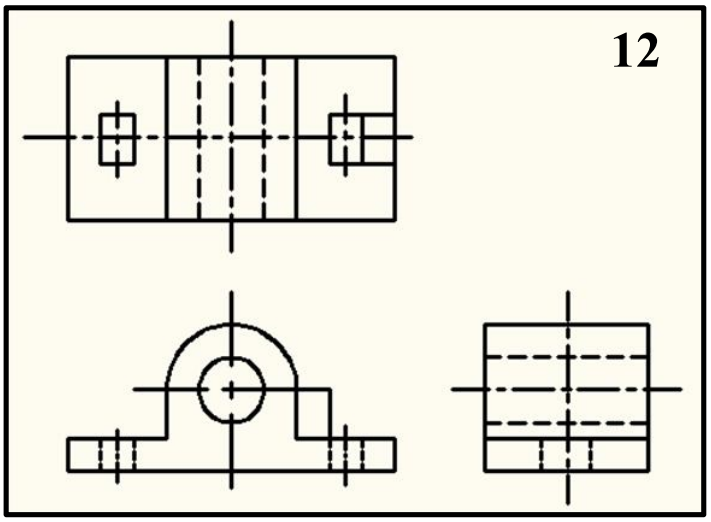
12

Review Questions

1. Why have you studied projection?
2. Define projection. Why it is necessary?
3. What do you mean by projection plane, projector and view? Show in a sketch.
4. Classify projection and define the types.
5. What are the possible orthographic views of an object?
6. Are all the orthographic views necessary to describe an object? If not, how will you choose the necessary views?
7. Describe the glass box method.
8. What do you mean by 1st angle and 3rd angle projection? Which one is British and which one is American System? Which one is easier and why?
9. Differentiate between 1st angle and 3rd angle projection.
10. Show the arrangement of views in 1st and 3rd angle projection system.
11. What is the standard symbol of 1st angle/ 3rd angle projection system?
12. Which lines are projected to their actual length?
13. Which lines are not projected to their actual length? How will you obtain projection of such lines?
14. How do you represent a hidden edge in a particular view? Give example.
15. How do you represent a circular/curved edge in a particular view? Give example.
16. How do you represent a hole in orthographic view? Give example.
17. What is the order of precedence of line in orthographic projection?
18. What will you do, if a solid line and a hidden line occur at the same location?
19. What will you do, if a center line and a hidden line occur at the same location?
20. How do you obtain views by diagonal line method?
21. How do you select/ decide spacing between views?
22. What is the standard spacing to be maintained between views?
23. How to control space between views in diagonal line method?
24. What are the advantages of orthographic projection?
25. What are the limitation/disadvantages of orthographic projection?
26. What do you mean by pictorial projection? Classify it.
27. What is the difference between axonometric and oblique projection?
28. What are the different types of axonometric projection? Why they are so named?
29. What is the difference between isometric, diametric and trimetric projection?
30. What is the difference between cabinet and cavalier projection?
31. What do you mean by perspective projection? How does it differ with pictorial projection?
32. Why the object appears to be shortened in perspective projection?
33. Why isometric projection is the most commonly used pictorial projection in engineering drawing?
34. What are the advantages of isometric projection over other types of pictorial projection?
35. In which position of object its front view becomes its isometric view?
36. How the object is rotated to obtain its isometric view?
37. Why are the objects appeared to be shortened in case of isometric projection? What is the percentage of shortening?
38. What is isometric scale? How it is constructed?
39. What is the difference between isometric projection and isometric drawing/view? Which one is advantageous and why?
40. What do you mean by isometric and non-isometric lines? Give examples.
41. How isometric drawing are constructed by box method.
42. Why is it helpful to draw orthographic views before drawing the isometric view of the object?
43. What is the isometric form of a rectangle/ square/ triangle/ circle?
44. In the box method, how will you decide the isometric axis for plotting width, length and height?
45. Draw isometric view of a pen/box/cube/paper weight.

CHAPTER 8
SECTIONING

Objectives

Objectives of studying this chapter are:

- Describe the purpose of sectioning in technical drawings
- Define cutting plane lines, direction of sight, section lining etc.
- Mention and explain the different kinds of sectioning

8.1 Introduction

The conventional method used to draw an object using the multi view or orthographic method of representation is discussed in Chapter 7. This system is excellent to illustrate various external features. In this method, complicated interior features are illustrated with hidden lines. These interior features can be shown more clearly by the use of sectional views.

8.2 Terminology

8.2.1 Sectioning

It is defined as an imaginary cut made through an object to expose the interior or to reveal the shape of a portion.

8.2.2 Sectional View

A sectional view is a view of an imaginary surface, exposed by an imaginary slicing-open of an object, allowing interior details to become visible. A sectional view is sometimes referred to as a cross section or simply section. It is a view in which all or a substantial portion of the view is sectioned.

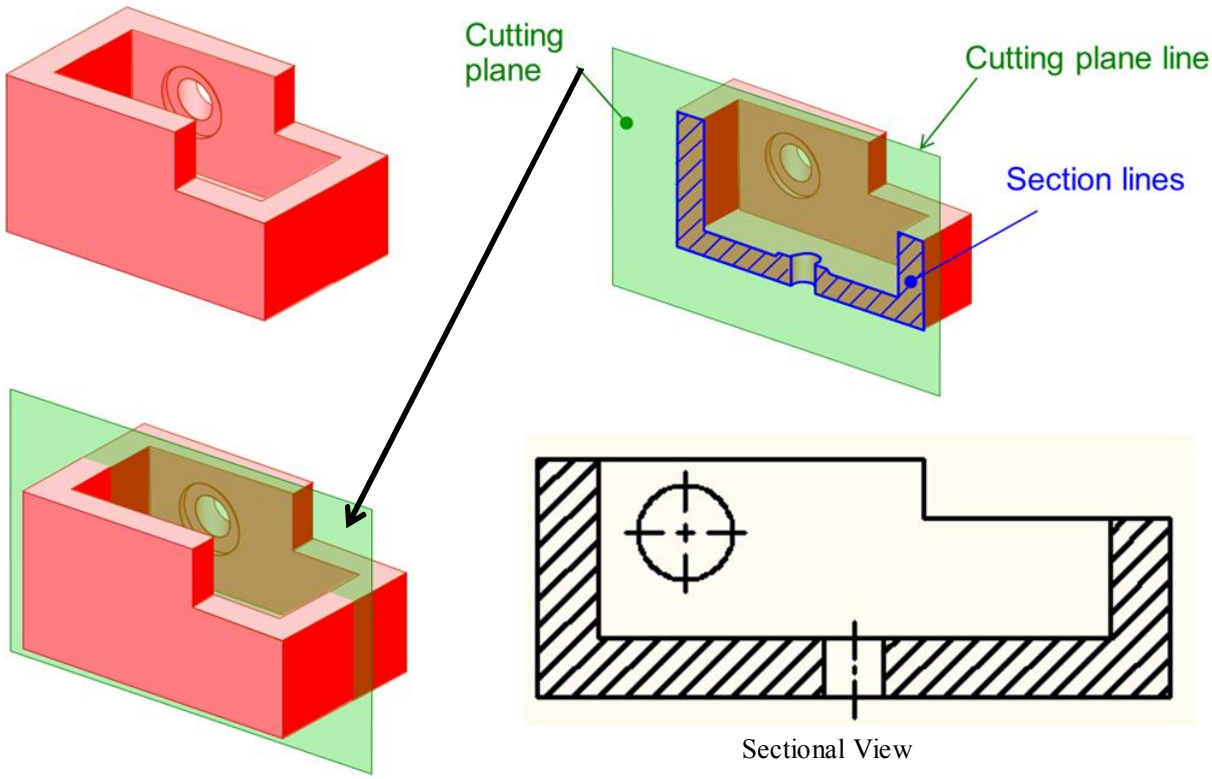

Fig. 8.1 Sectioning of an Object

8.2.3 Cutting Plane

Cutting plane is a plane that imaginarily cuts the object to reveal the internal features.

8.2.4 Cutting Plane Line

Cutting plane line is an edge view of the cutting plane. The cutting-plane line indicates the path that an imaginary cutting plane follows to slice through an object. Think of the cutting-plane line as a saw blade that is used to cut through the object. The cutting-plane line is represented by a thick black dashed line. Standard format of cutting plane line is already discussed in chapter 2.

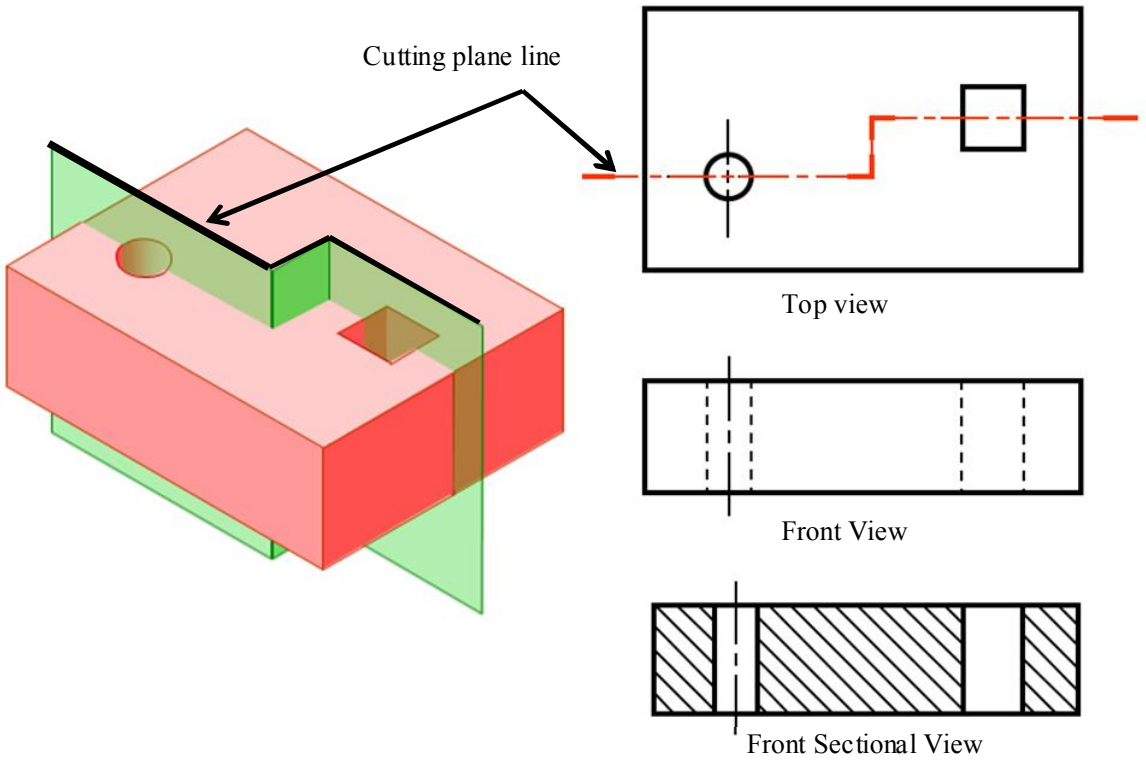

Fig. 8.2 Section Line and Sectional View

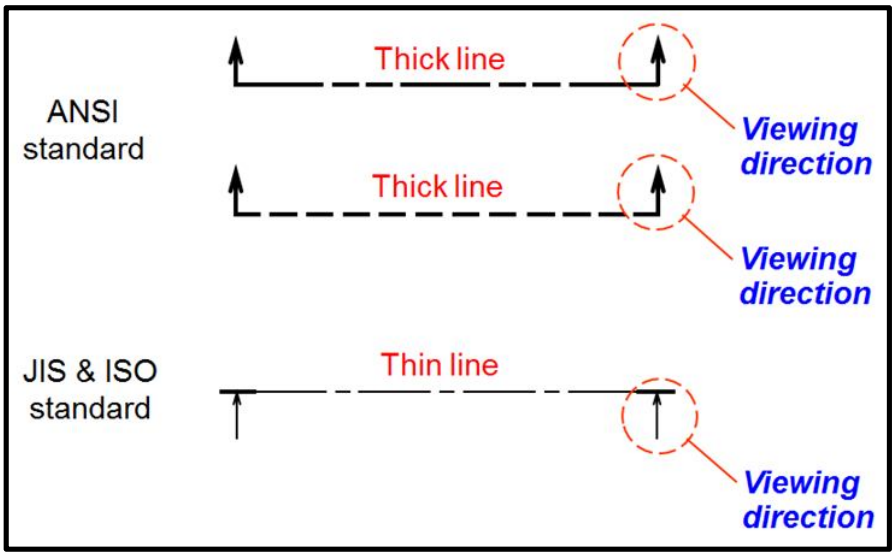

Fig. 8.3 Standard Cutting Plane Line

8.2.5 Section Lining

Section lining shows the locations where the object is sliced or cut by the cutting plane or the location where the surface or surfaces are cut by the cutting plane. Symbol for section lining is different for different materials, but in practice the symbol of cast iron i.e. the cross-hatch lines are used for sectioning of any materials. They are represented by thin, black lines drawn at 45^0 to the horizontal, unless there is some specific reason for using a different angle. Section lining is spaced by eye from 1/16" (1.5mm) to 1/4"(6 mm) apart, depending upon the overall size of the object. The average spacing used for most drawings is .13"(3 mm). However, all the section lines in a drawing must be of uniform thickness and they should be evenly spaced.

If a cutting plane passes through two parts, each part has section lines using a 45° angle or other principal angle. These section lines should not be aligned in the same direction. If the cutting plane passes through more than two parts, the section lining of each individual part must be drawn at different angles. When an angle other than 45° is used, the angle should be 30° or 60°. Section lining should not be parallel with the sides of the object to be section lined.

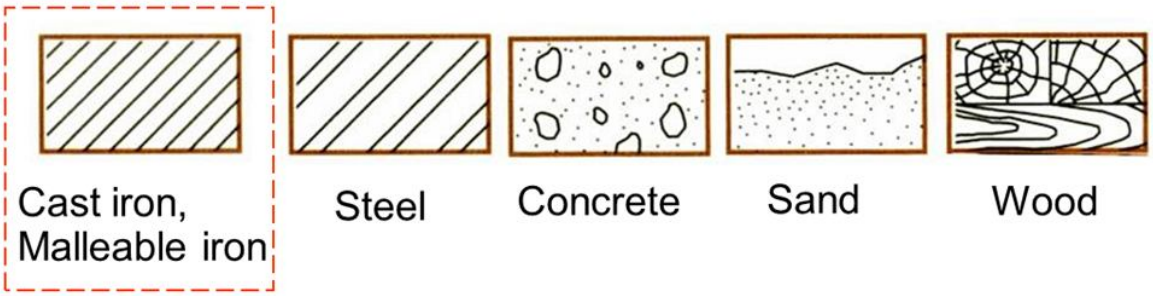

Fig. 8.4 Symbol for Section Lining of Different Materials

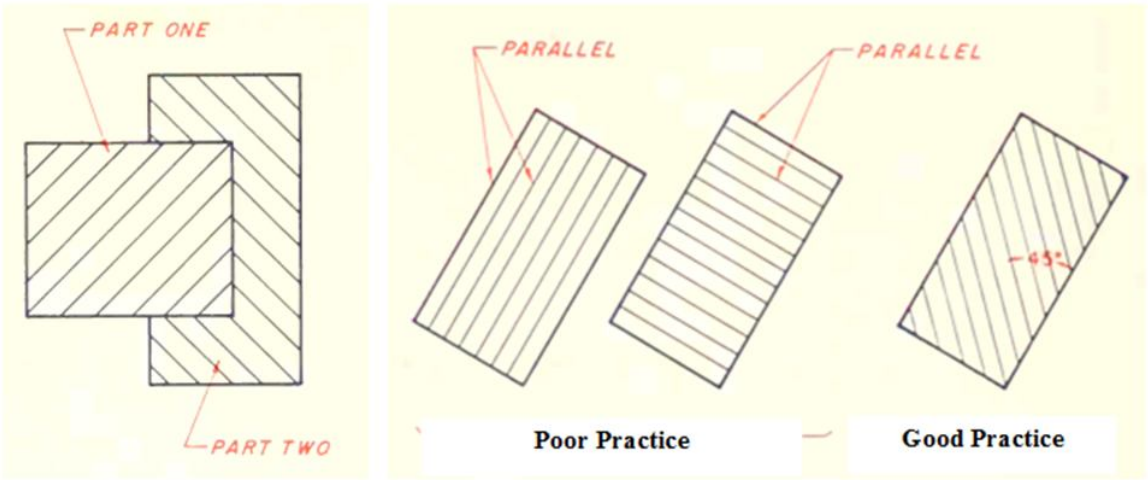

Fig. 8.5 Method of Aligning Section Lines

8.3 Types of Section

The different kinds of sections used today are:

i. Full section
ii. Offset section
iii. Half section
iv. Broken-out section
v. Revolved section
vi. Removed section.
vii. Auxiliary section etc.

In this part, we only discuss the most commonly used types of sections.

8.3.1 Full Section

A full section is simply a section of one of the regular multi views that is sliced or cut completely in two. When the cutting plane passes through the entire object a full sectional view is obtained. Hidden lines are omitted from sectional view.

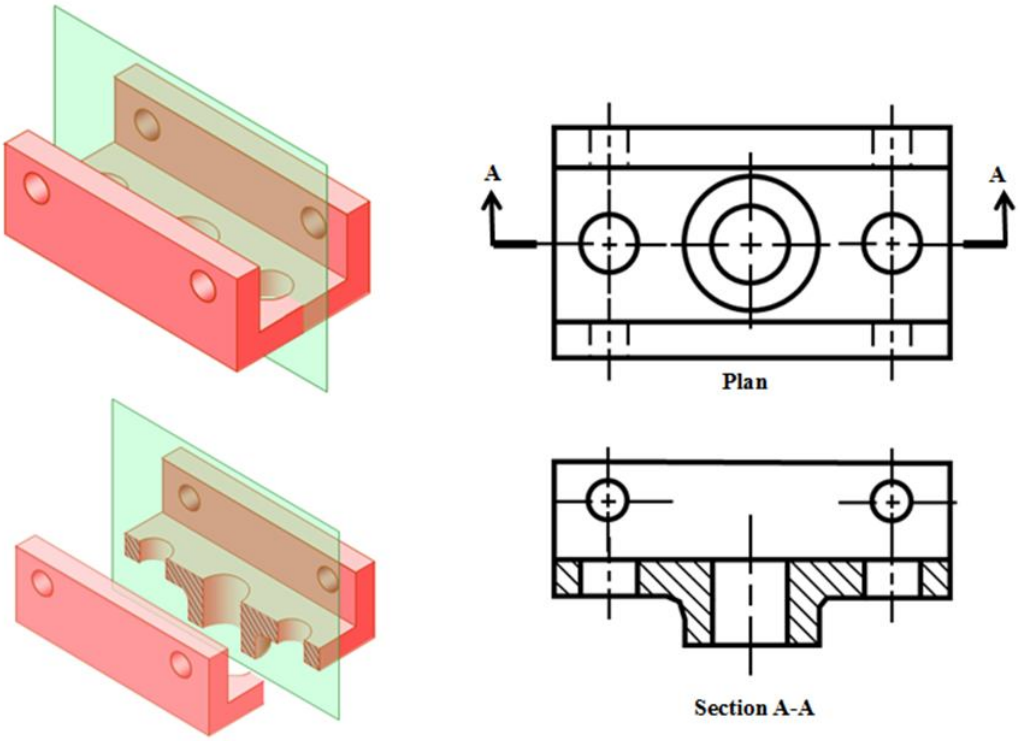

Fig. 8.6 Full Section

8.3.2 Offset Section

Many times, important features do not fall in a straight line as they do in a full section. These important features can be illustrated in an offset section by bending or offsetting the cutting-plane line. An offset section is very similar to a full section, except that the cutting-plane line is not straight.

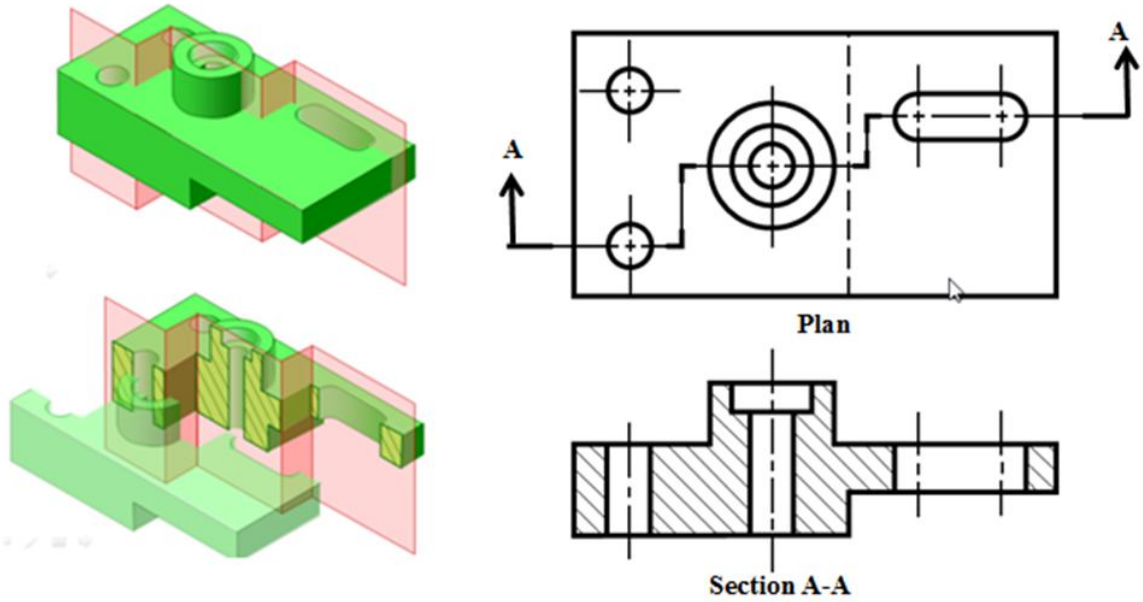

Fig. 8.7 Offset Section

8.3.3 Half Section

The sectional view obtained by passing the cutting plane halfway through an object is called a half sectional view. In this case a quarter portion of the object is imagined to be removed. A cutting plane is added to the front view, with only one arrowhead to indicate the viewing direction. Half sections are best used when the object is symmetrical, that is, the exact same shape and size on both sides of the cutting-plane line. A half-section view is capable of illustrating both the inside and the outside of an object in the same view.

A center line is used to separate the sectioned half from the unsectioned half of the view. As usual, hidden lines are omitted from sectional view.

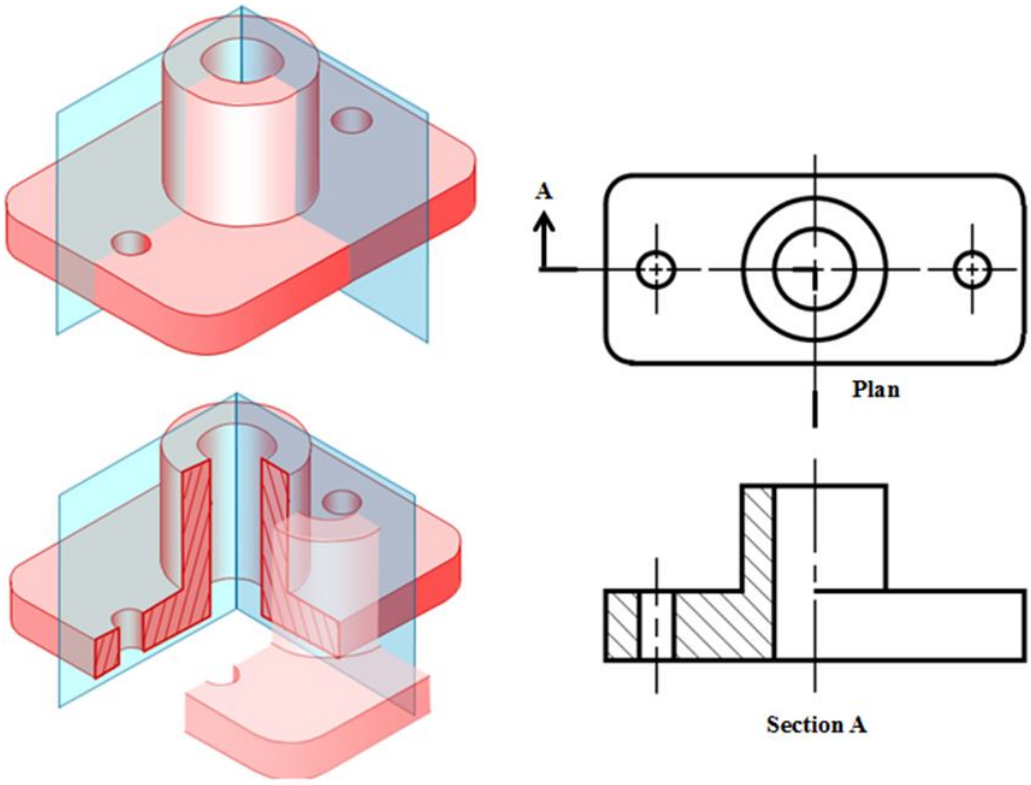

Fig. 8.8 Half Section

8.3.4 Broken-out Section

Sometimes, only a small area needs to be sectioned in order to make a particular feature or features easier to understand. In this case, a broken-out section is used. It is the sectional view of a fractional part of object. Broken-out sections are helpful when some interior details are to be shown but a full or half section is not feasible because that would remove some essential feature of the object. In such case a broken-out section is made directly of the exterior view. In fig. 8.9 the top section is somewhat confusing and could create a question. To clarify this area, a portion is removed. The view is made by passing the cutting plane normal to the viewing direction and removing the portion of an object in front of it. A break line is used to separate the sectioned portion from the unsectioned portion of the view. There is no cutting plane line.

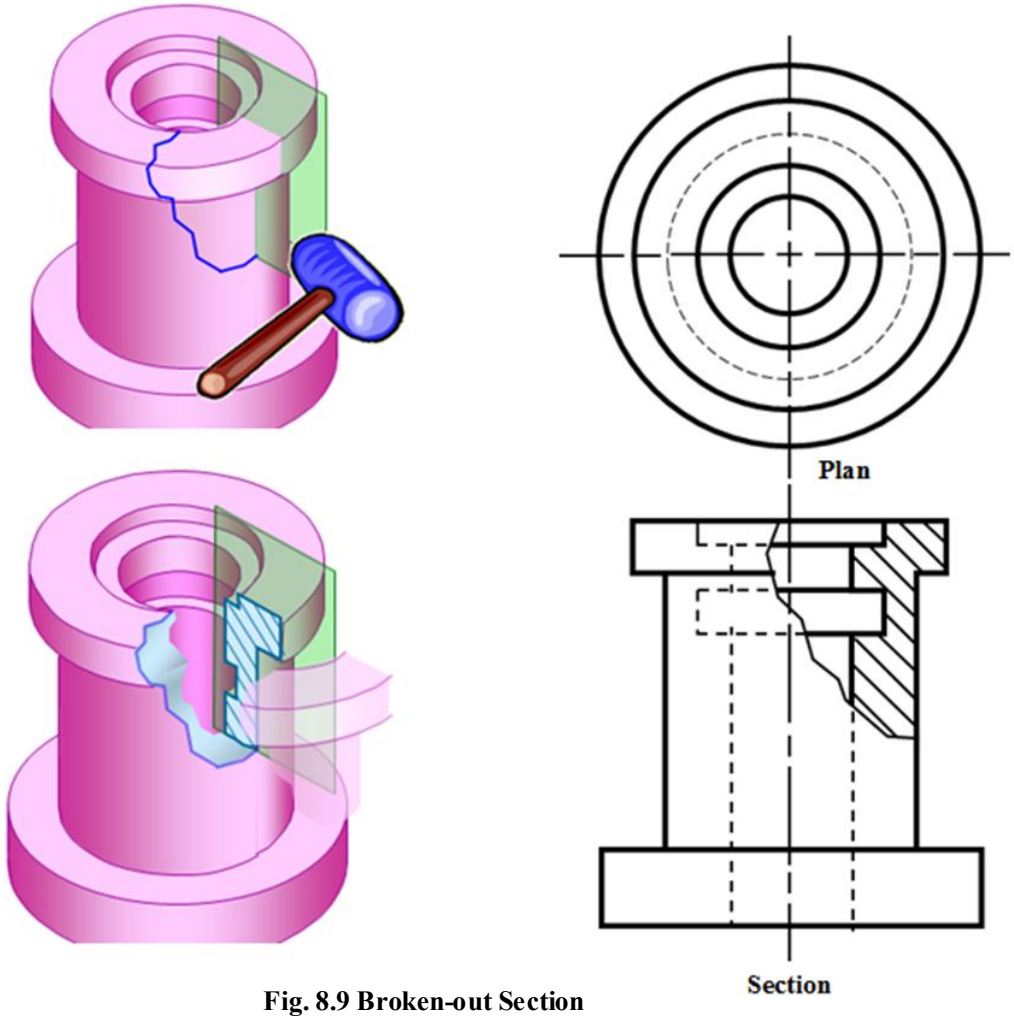

Fig. 8.9 Broken-out Section

8.3.5 Revolved Section

A revolved section, sometimes referred to as a rotated section, is used to illustrate the cross section of ribs, webs, bars, arms, spokes or other similar features of an object. Revolved sections show cross-sectional features of a part. One great advantage of revolved section is that there is no need for additional orthographic views. This section is especially helpful when a cross-section varies. An imaginary cutting plane is assumed to pass across the feature to be sectioned and then the obtained section is rotated by 90^0. The rotated section is then either superimposed on the orthographic view of positioned with break lines.

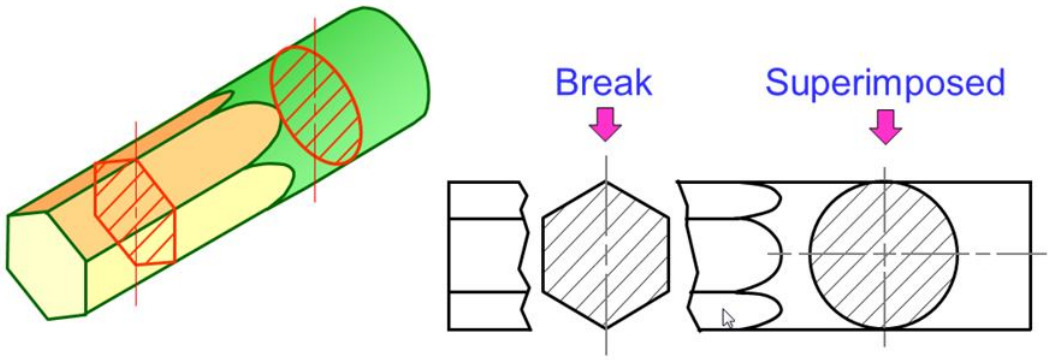

Fig. 8.10 Placement of Revolved Section

Following is the steps of constructing a revolved section

- ✓ **Step 1:** Assign position of cutting plane on the top view or plan.
- ✓ **Step 2:** Draw axis of rotation in front view.
- ✓ **Step 3:** Transfer the depth dimension to the front view.
- ✓ **Step 4:** Draw the revolved section on the front view enclosed by the lines indicating depth dimension.

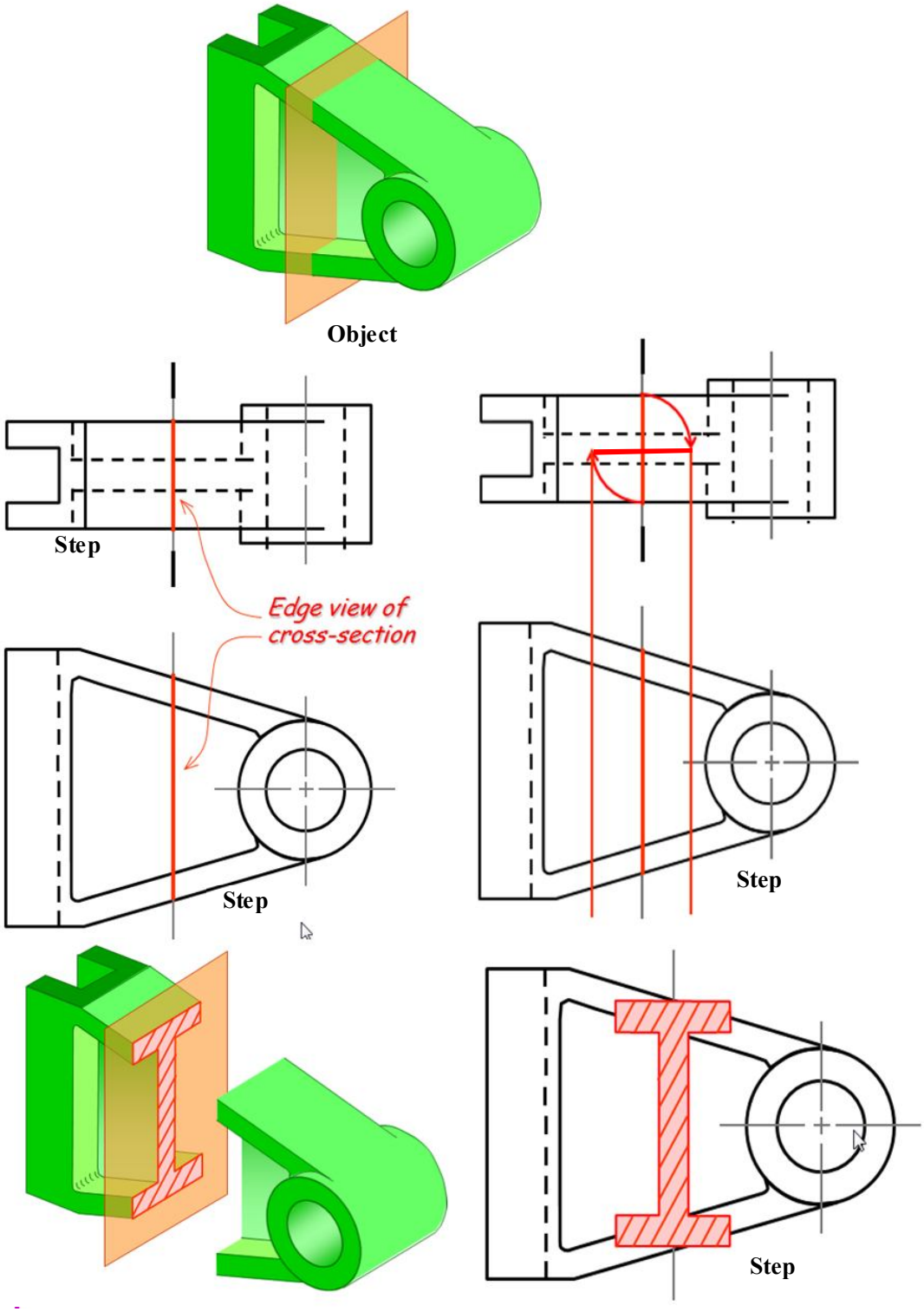

Fig. 8.11 Steps for Construction of Revolved Section

8.3.6 Removed Section

Revolved sections tend to be confusing, and often create problems for the people who must interpret the drawings. Today, it is recommended to use a removed section instead of a revolved or rotated section. A removed section is very similar to a rotated section except that, as the name implies, it is drawn removed or away from the regular views. The removed section is also used to illustrate the cross section of ribs, webs, bars, arms, spokes or other similar features of an object. Note that a removed section must identify the cutting-plane line from which it was taken. In the sectional view, do not draw features other than the actual section. the removed section should be drawn on the same page as the regular views.

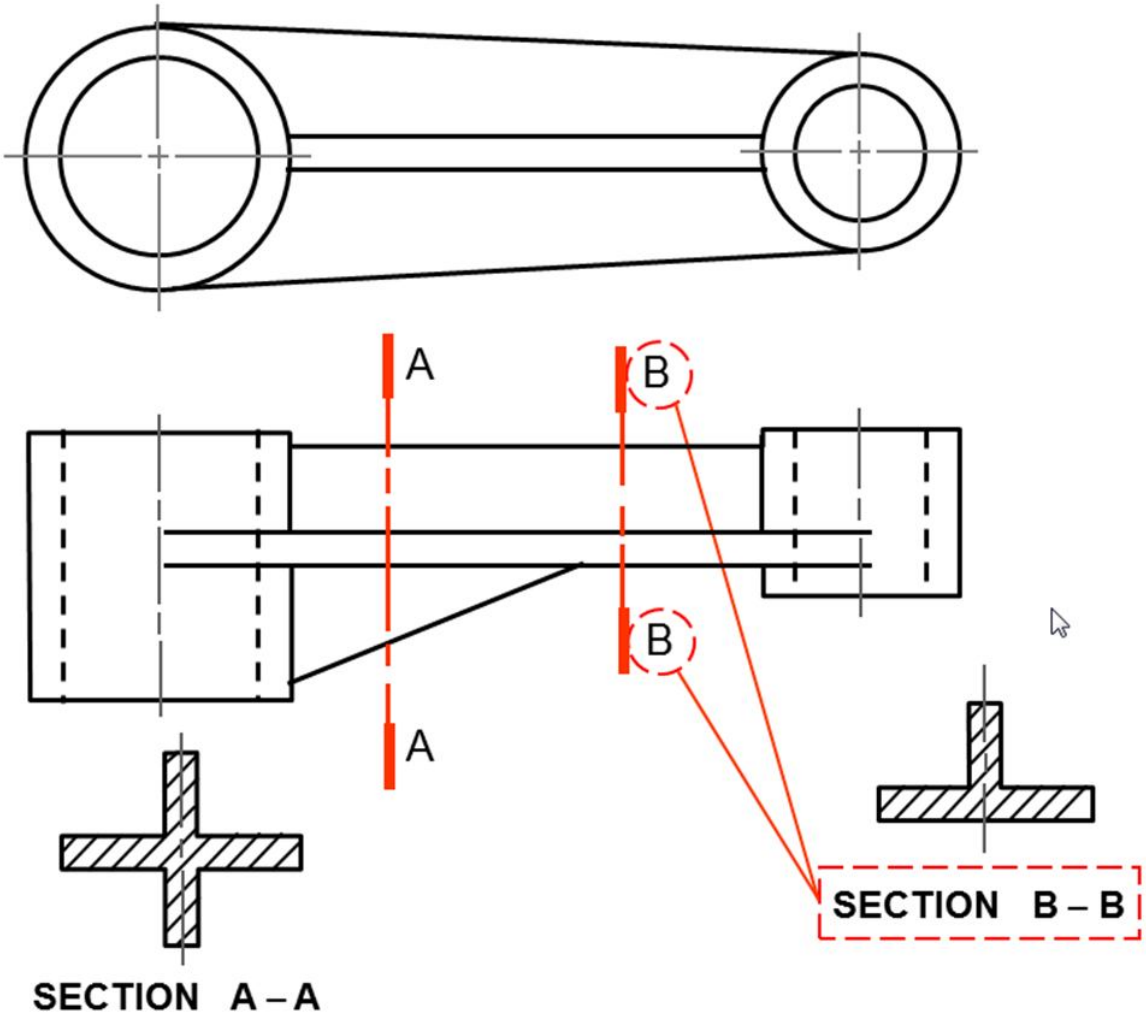

Fig. 8.12 Removed Section

8.4 Special Consideration for section of Ribs, Spokes and lugs

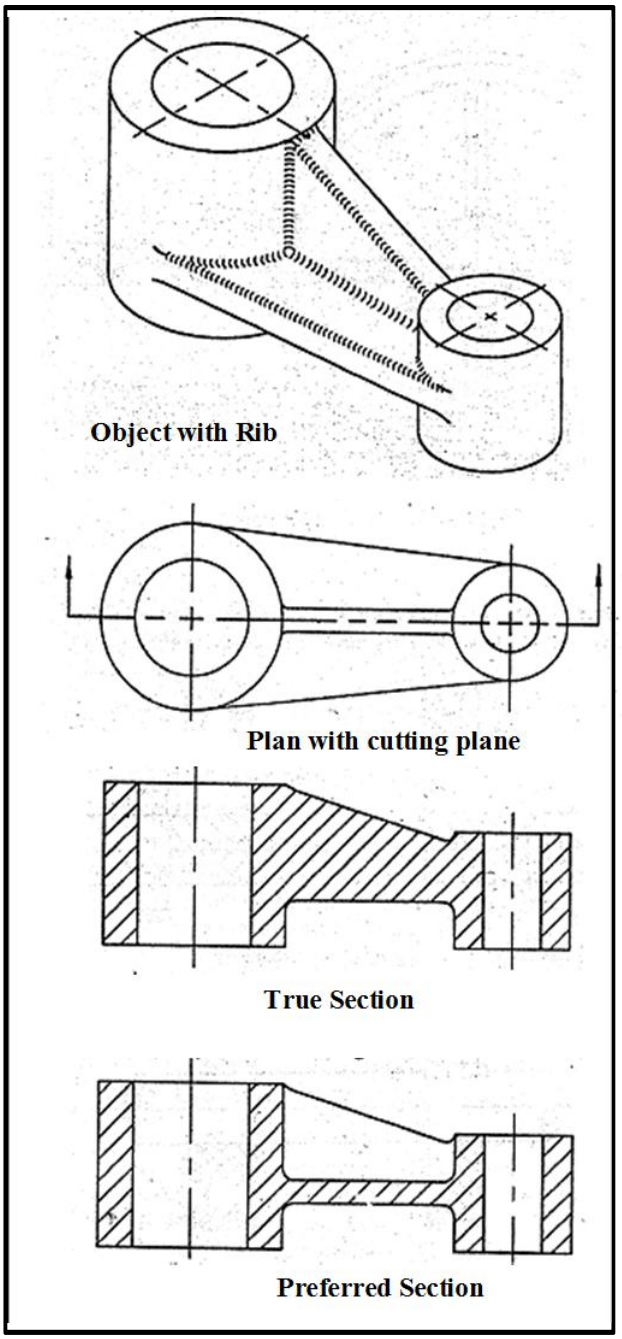

Fig. 8.13 Sectioning of Object with Even Number of Ribs

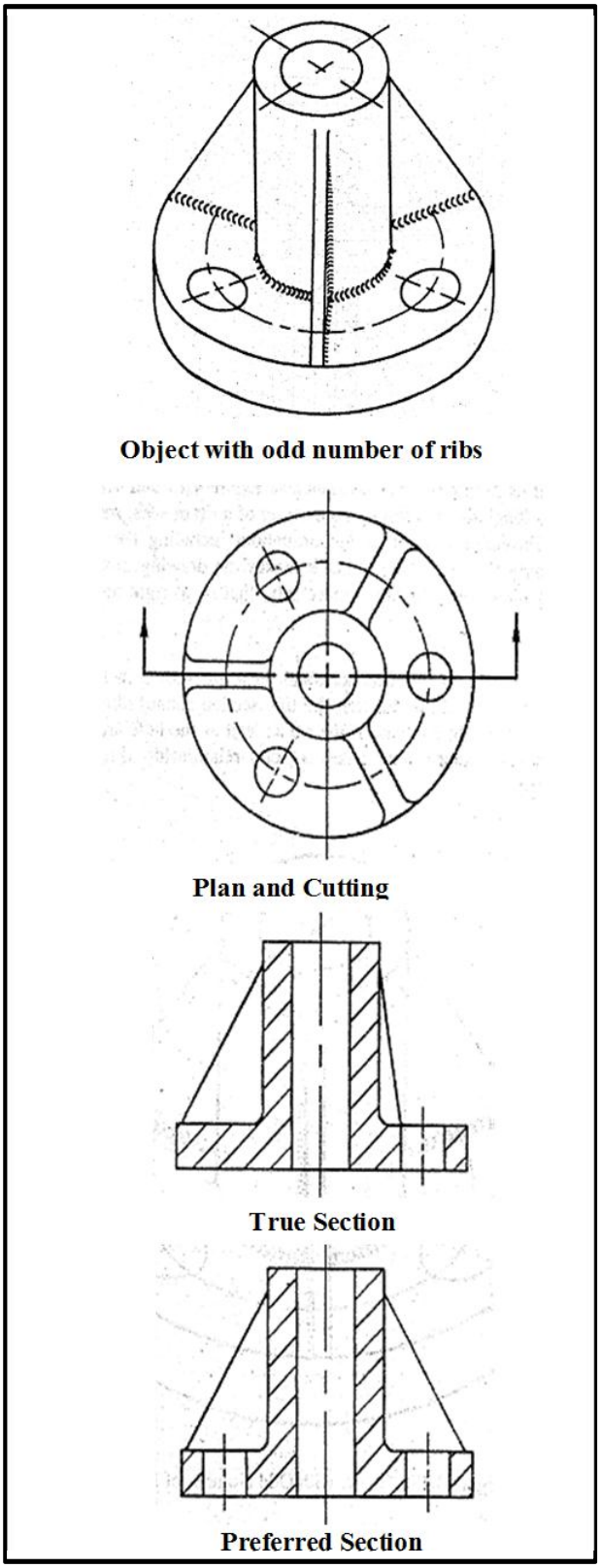

Fig. 8.14 Sectioning of Object with Odd Number of Ribs

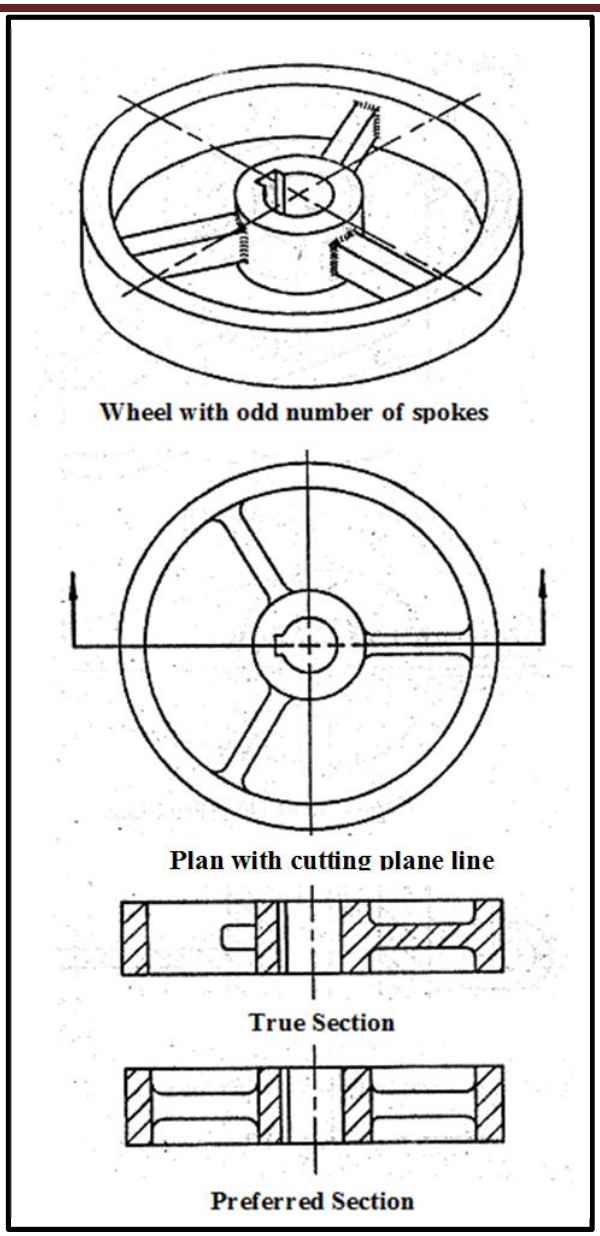

Fig. 8.15 Sectioning of Object with Odd Number of Spokes

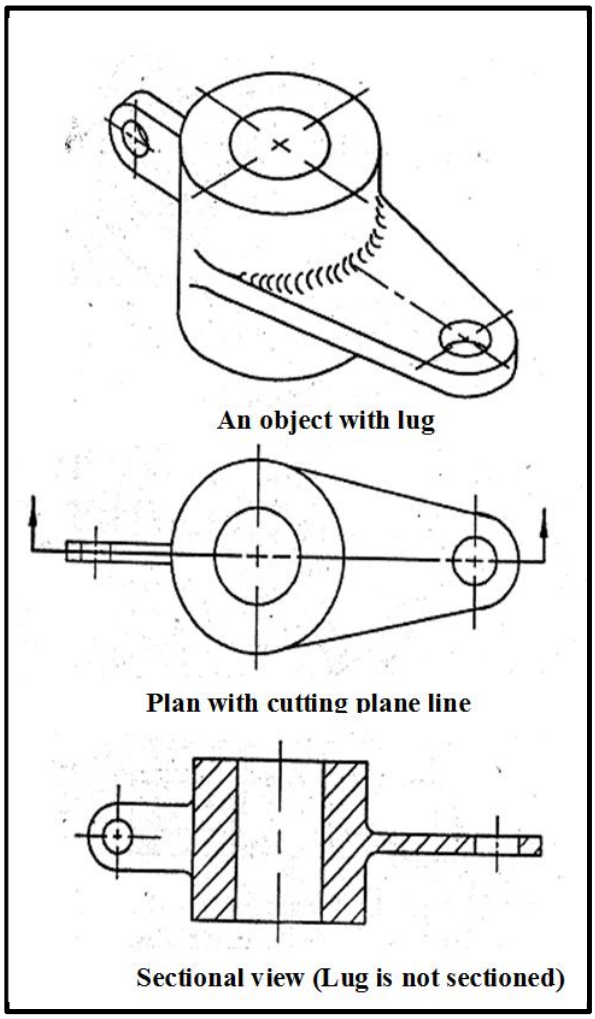

Fig. 8.16 Sectioning of Object with Lug

8.5 Parts that Should Not Be Sectioned

Shaft, bolts, nuts, rivets, balls, pin and keys are not sectioned even when they are in the line of cutting plane. They are always left in full view to avoid confusion.

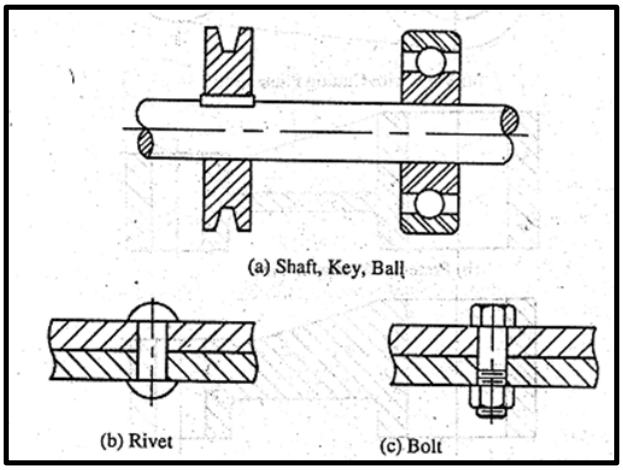

Fig. 8.17 Parts Not to Be Sectioned

8.6 Worked-out Examples of Sectioning

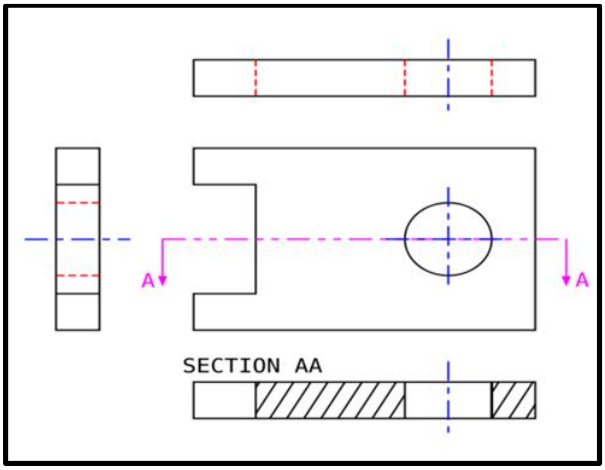

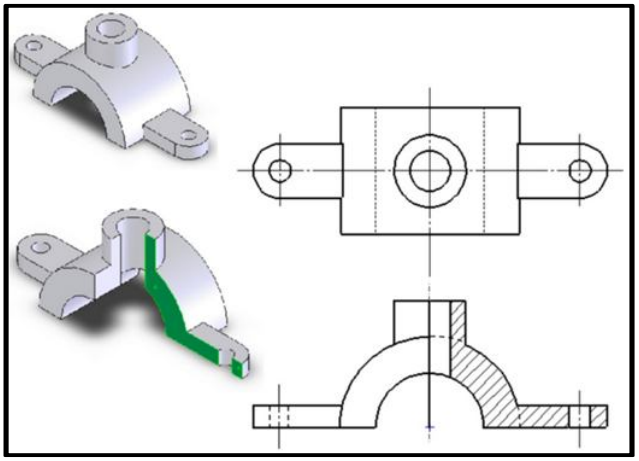

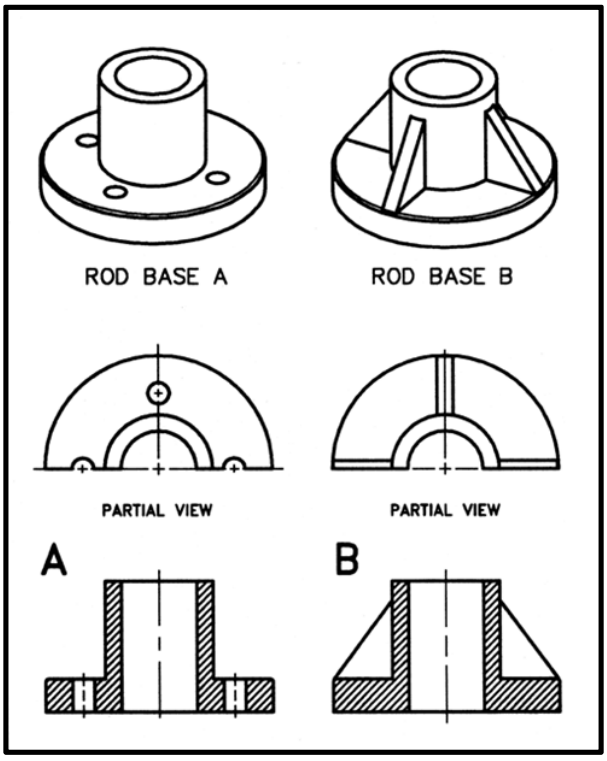

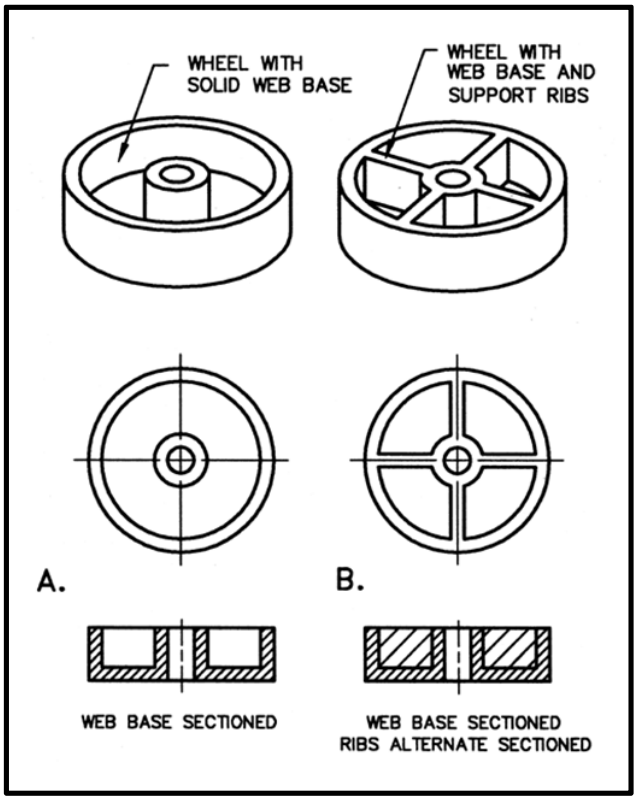

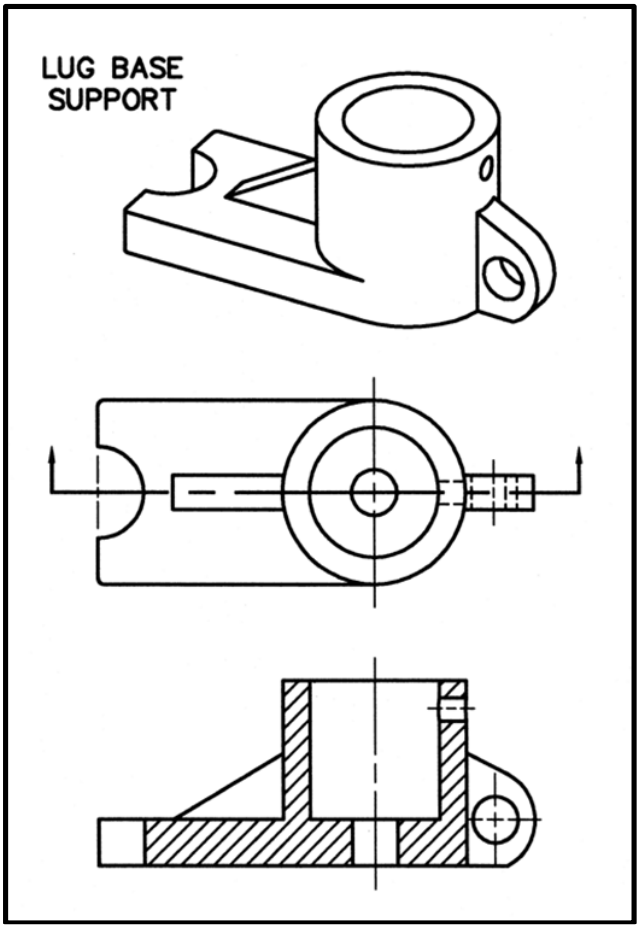
LUG BASE
SUPPORT

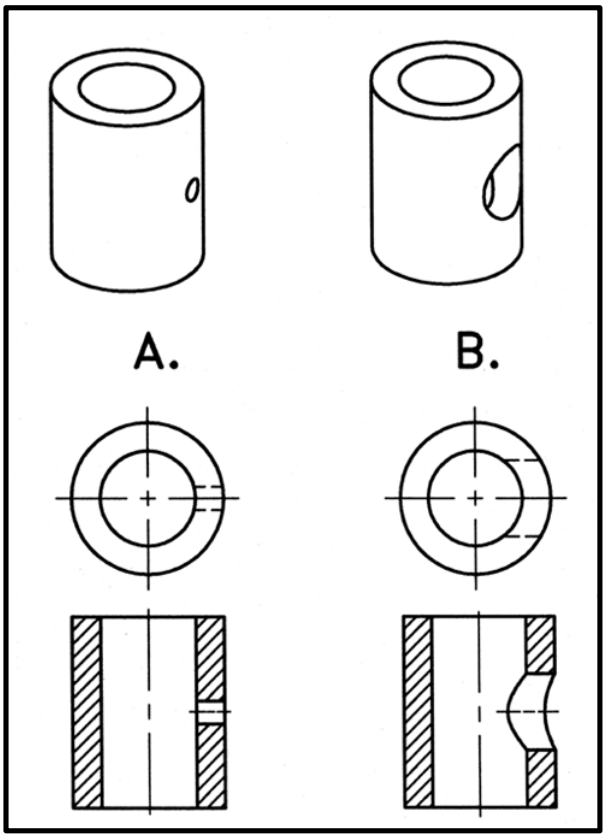
A.
B.

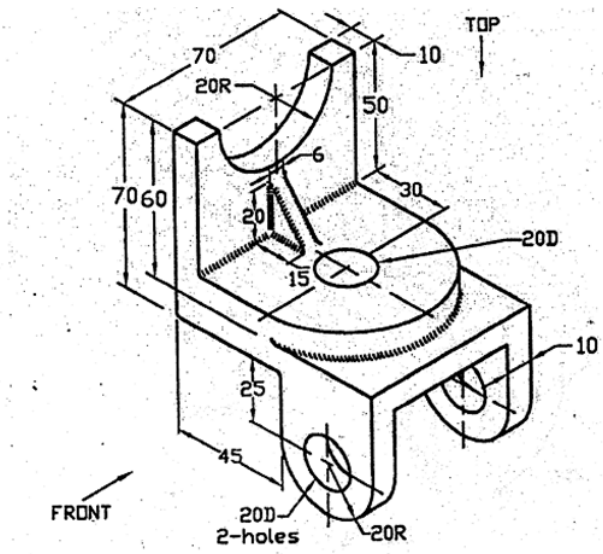
TOP
70
20R
10
50
6
70
60
30
20
20D
15
10
25
45
FRONT
20D
2-holes
20R

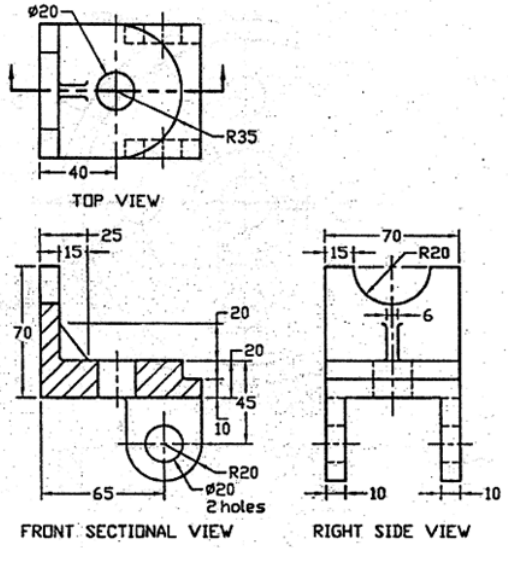
ø20
R35
40
TOP VIEW
25
15
20
70
20
45
10
R20
ø20
2 holes
65
FRONT SECTIONAL VIEW
70
15
R20
6
10
10
RIGHT SIDE VIEW

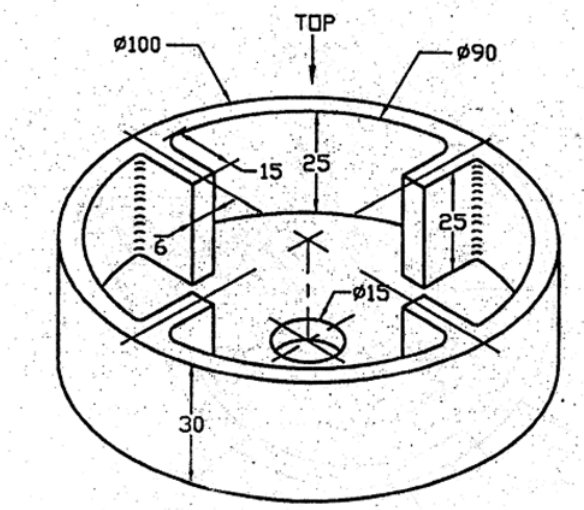
TOP
ø100
ø90
15
25
6
25
ø15
30

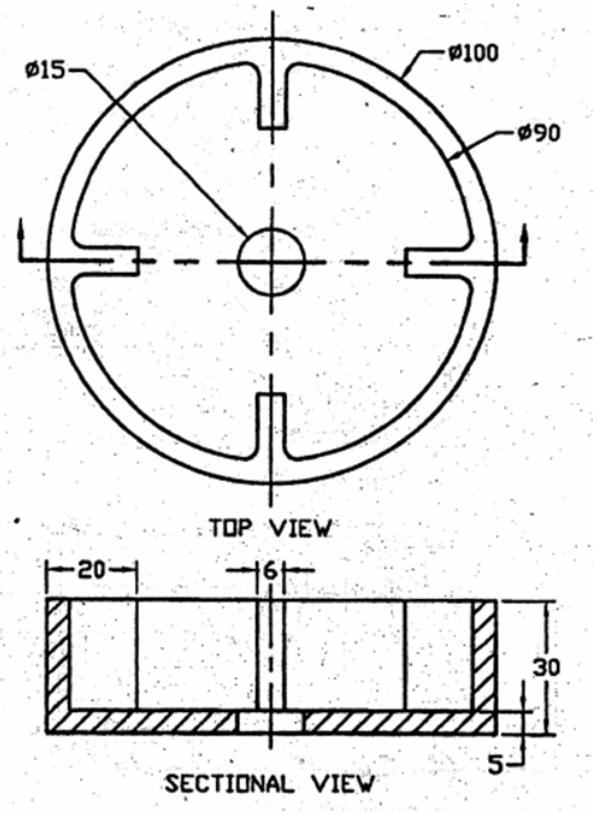
ø15
ø100
ø90
TOP VIEW
20
6
30
5
SECTIONAL VIEW

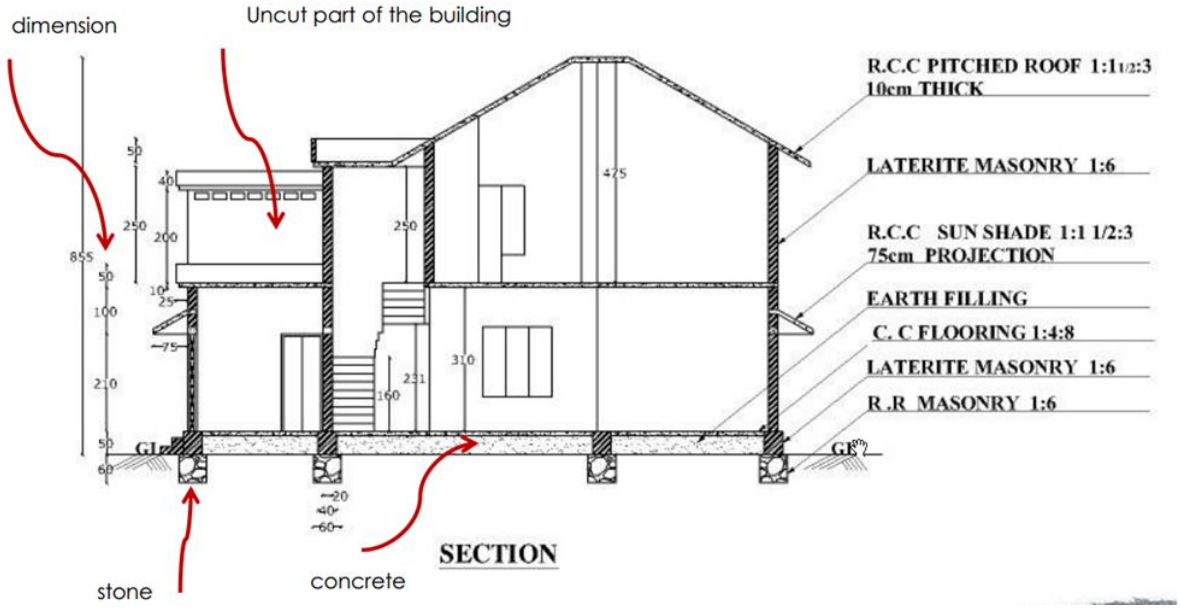
dimension
Uncut part of the building
R.C.C PITCHED ROOF 1:1½:3
10cm THICK
LATERITE MASONRY 1:6
R.C.C SUN SHADE 1:1 1/2:3
75cm PROJECTION
EARTH FILLING
C. C FLOORING 1:4:8
LATERITE MASONRY 1:6
R.R MASONRY 1:6
GL
GL
SECTION
stone
concrete

Exercise and Assignments

1. Draw plan and section along the centroidal axis of the plan.

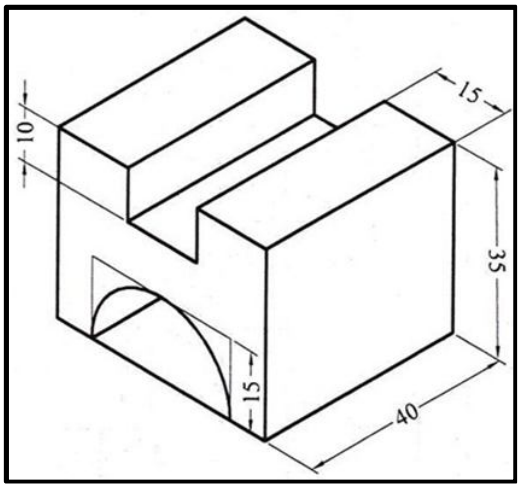

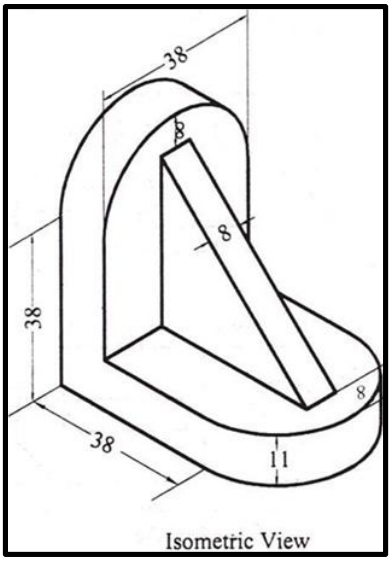

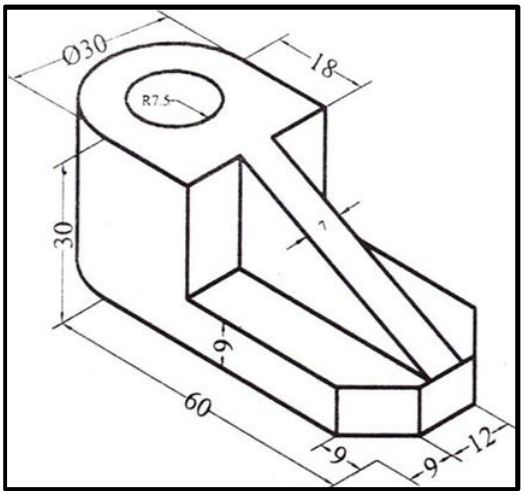

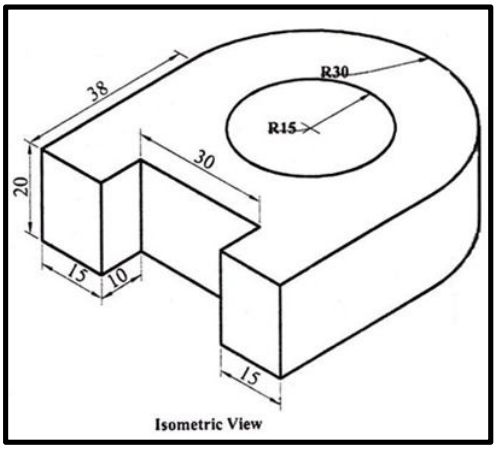

2. Draw top view and a suitable section for the slider block shown below.

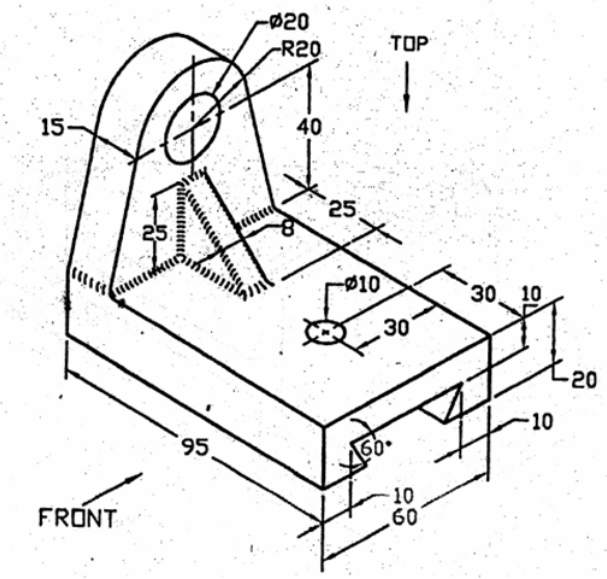

3. Draw top view and a suitable section for the bearing shown below.

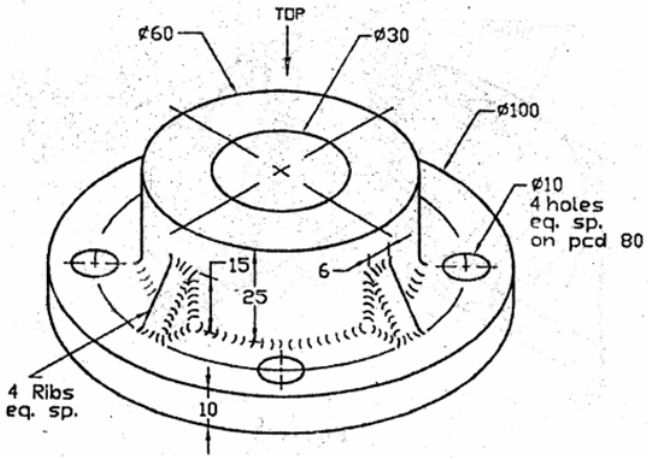

4. Draw top view and a suitable section for the bearing container shown below.

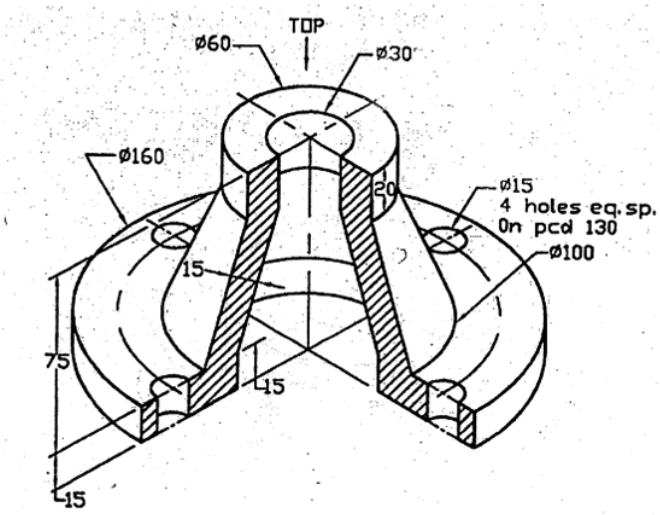

5. Draw plan and sectional view of a single storied building.
6. Draw plan, elevation and cross section of a rectangular water tank having walls made of brick and floor made of concrete.
7. Draw plan, elevation and section of the objects shown in chapter 7, exercise 1.

Review Questions

1. Why have you studied sectioning?
2. Define section, section line, cutting plane and cutting plane line. How are they represented in drawing?
3. Draw section lining to represent cast iron, steel, concrete and wood.
4. What is common section lining used for any type of materials? How it is aligned?
5. How will you draw section lines if the cutting plane passes two separate element of an object?
6. How will you draw section line if the object is aligned?
7. How will you chose spacing between section lines?
8. What are the different types of section?
9. When and how a full section is obtained?
10. What is the similarity/difference between a full section and an offset section?
11. When does offset section become necessary?
12. When and how a half section is obtained?
13. What are the advantages of a half section over a full section?
14. What is broken-out section? When is it used?
15. When and how a revolved section is obtained?
16. What are the different methods of placing the revolved section? Give example.
17. What is the similarity/difference of removed section and revolved section?
18. Why is a removed section being preferred to a revolved section?
19. What is the special consideration for sectioning a rib, spoke and lug?

Bibliography

1. D.N. Ghose, *Civil Engineering Drawing and Design*, 1987, 1st ed., Delhi – CBS publishers and Distributors.

2. Dr. Amalesh Chandra Mandal, Dr. Md. Quamrul Islam, *Mechanical Engineering Drawing*, 2007, 1st ed., Dhaka – Associate Printing Press.

3. Wuttet Taffesse, Laikemariam Kassa, *Lecture Notes on Engineering Drawing*, 2005, 1st ed., Ethiopia Public Health Training Initiative – Ethiopia Ministry of Education.

4. David L. Goetsch, John A. Nelson, William S. Chalk, *Technical Drawing Fundamentals Cad Design,* 1986, 2nd ed., New York – Delmar Publishers Inc.

5. R.K. Dhawan, A Textbook of Machine Drawing, 2001, 2nd ed., New Delhi – S. Chand & Company Ltd.

6. M.B. Shah, B.C. Rana, *Engineering Drawing,* 2009, 2nd ed., New Delhi – Dorling Kindersley (India) Pvt. Ltd.

7. K. Venkata Reddy, *Textbook of Engineering Drawing,* 2008, 2nd ed., Hyderabad – BS Publications.

8. Gurcharan Sing, Subhash C. Sharma, *Civil Engineering Drawing,* 2006, 7th ed., Delhi – Standard Publishers Distributors.

9. Wikipedia

10. Documents, power point presentations and lecture notes freely available over internet.