HOUZER®
www.HouzerSink.com

Quartztone®
Topmount 60/40 Double Bowl
Model P-175

FEATURES

- 80% quartz and granite
- 9-1/2" depth • Pre-scored up to 5 faucet holes
- Intrinsically hygienic non-porous surface
- Antibacterial protection with silver ion Microstop®
- Silky to the touch, 3 times harder than natural granite
- Food-safe, UV-stable-will not fade • Color-fast throughout
- Heat resistance to +500°F
- Highest resistance to thermal shock, scratches and chips
- Ariapure® features odor and pollutant disinfection
- Fits 36" sink base
- Supplied with cutout template, fasteners and instructions
- 1 year Limited Warranty

P-175

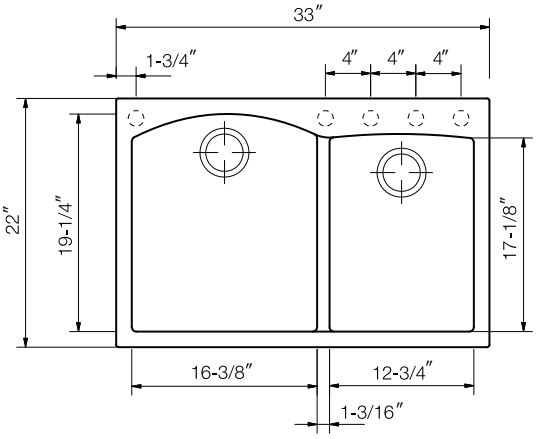

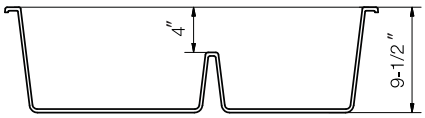

OPTIONAL COLORS

Midnite Metallic
Mocha Solid
Taupe Structured
Sand Solid
Cloud Solid

OVERALL DIMENSIONS	EACH BOWL	CUTOUT SIZE	PACKAGING*	WEIGHT*
33″ x 22″	16-3/8″ x 19-1/4″ 12-3/4″ x 17-1/8″	See Template	1/10 pcs.	51/550lbs.

*Standard packaging: Single boxed /Pallet of single boxed.
All dimensions are in inches. Specifications subject to change without notice.

OPTIONAL ACCESSORIES

Bottom Grid: 629801(large bowl),
629802(small bowl)
Strainer Options: Stainless steel strainers, Color strainers, Color Disposal flanges

Project/Job name _____

Architect/Engineer _____

Contractor _____

Model _____ Q'ty _____

Notes _____

HOUZER Inc. 2605 Kuser Road, Hamilton, NJ 08691 Phone 1-800-880-3639 Fax 1-609-584-1930 www.HouzerSink.com