EXAMINATIONS COUNCIL OF ZAMBIA

Examination for School Certificate Ordinary Level

Geometrical and Mechanical Drawing 7040/1

Paper 1

Wednesday **15 NOVEMBER 2017**

Additional Material(s):

A2 Drawing paper (1 sheet)

Standard drawing equipment

Time: 2 hours 30 minutes **Marks: 100**

Instructions To Candidates

Print your Name, Centre Number and Candidate Number at the bottom right-hand corner of your drawing paper.

There are **eight** questions in this paper. Answer **five** questions.

Answer not more than **three** questions from any one section.

Unless otherwise stated, strictly geometrical methods must be used, solutions are to be drawn in full size and no dimensions are required. All construction lines must be shown clearly, but lines which are parallel to, perpendicular to or inclined at angles of **30°**, **45°** or **60°** to other lines may be drawn without showing construction lines.

Use only one sheet of A2 drawing paper.

You may use **both** sides of the drawing paper for your answers.

Information for Candidates

The number of marks is given in brackets [ ] at the end of each question or part question.

All dimensions are in millimetres unless otherwise stated.

Cell phones are **not** allowed in the examination room.

SECTION A

Answer **two** or **three** questions from this section.

QUESTION 1

Figure 1 shows a profile of a metal plate. Copy the profile full size, showing all constructions and tangential points.

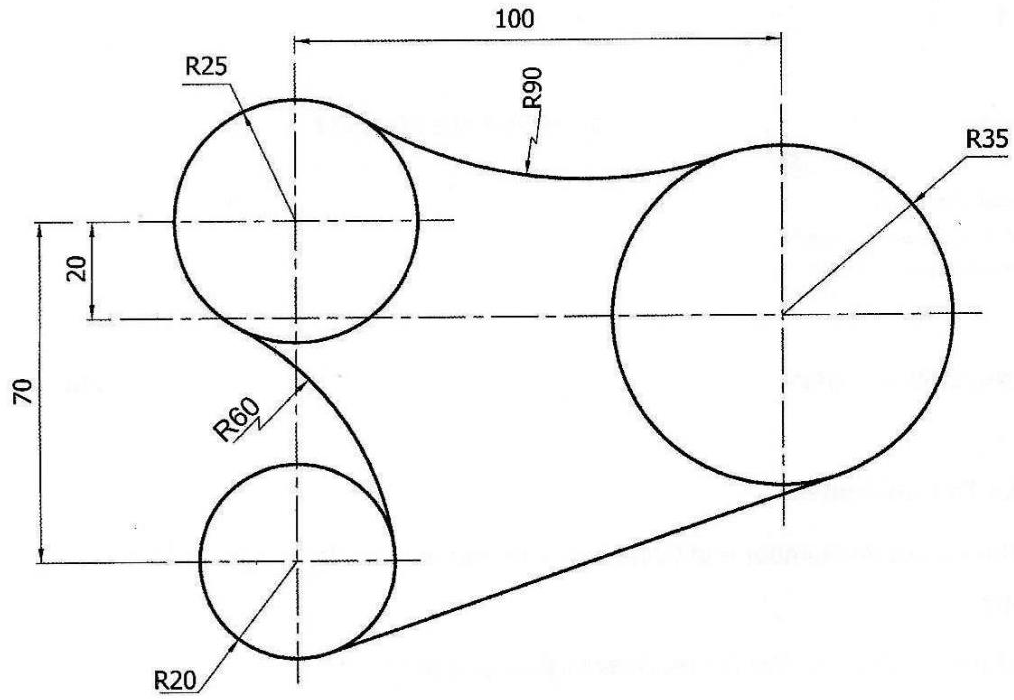

Figure 1

[20]

QUESTION 2

Triangle ABC is such that AB = 100, AC = 80 and Angle ACB = 45°.

(a) Construct the triangle.

(b) Transpose the triangle in (a) above to a square of equal area.

(c) Inscribe a circle in the resulting square.

(d) Measure and state the diameter of the circle.

[20]

QUESTION 3

Figure 2 shows a link mechanism in which crank **OA** rotates about a fixed centre **O**. The rod **AP** has a point **B** which is constrained to move along guide **OT**, and is pin-jointed to crank **OA**, at **A**.

For one complete revolution of crank **OA**, plot the locus of point **P**. **[20]**

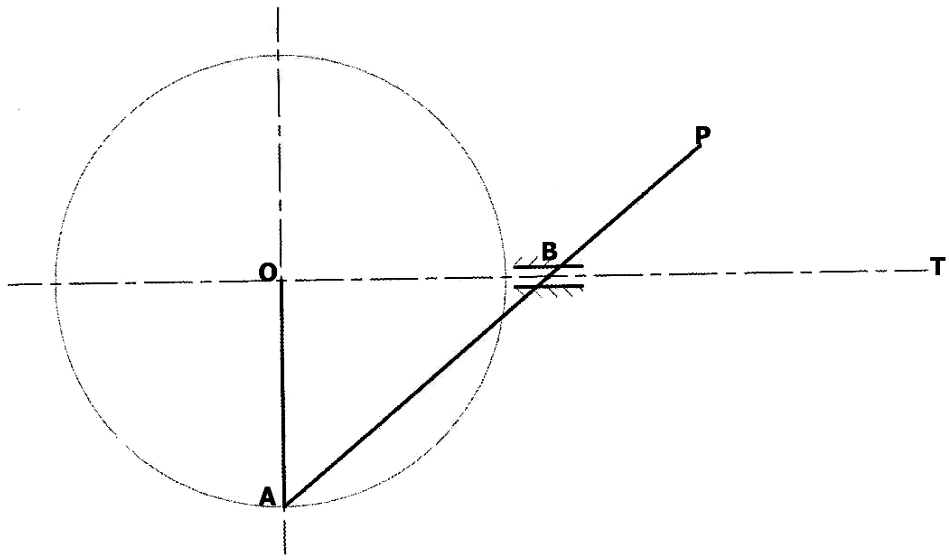

Figure 2

OA = 45

AP = 110

BP = 40

AB = 70

SECTION B SOLID GEOMETRY

Answer not more than **three** questions from this section.

QUESTION 4

Figure 3 shows three views of a bracket drawn in **First Angle Projection**.

DO NOT copy the given views, but draw full size the bracket in isometric projection with point **P** as the lowest point.

DO NOT show hidden details. **[20]**

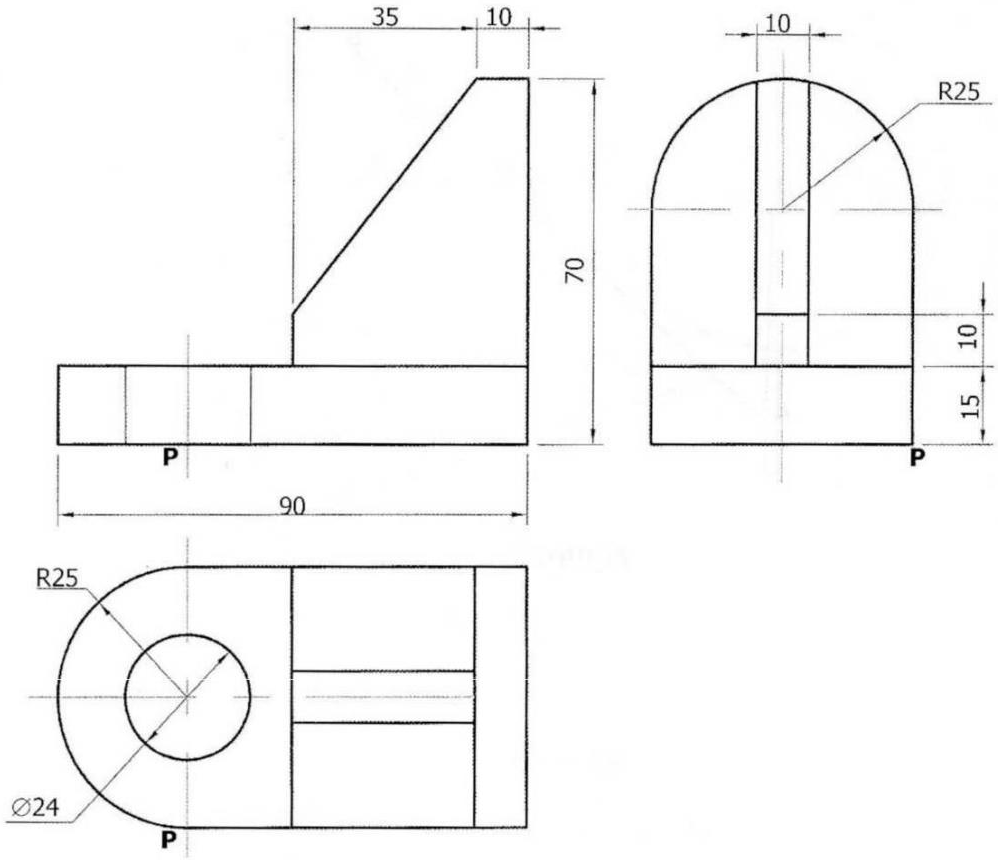

FIGURE 3

QUESTION 5

Figure 4 shows the elevation and incomplete plan of a Frustum of a right square pyramid.

(a) Draw the given elevation and complete the plan.

(b) Draw the true shape of the cut surface.

[20]

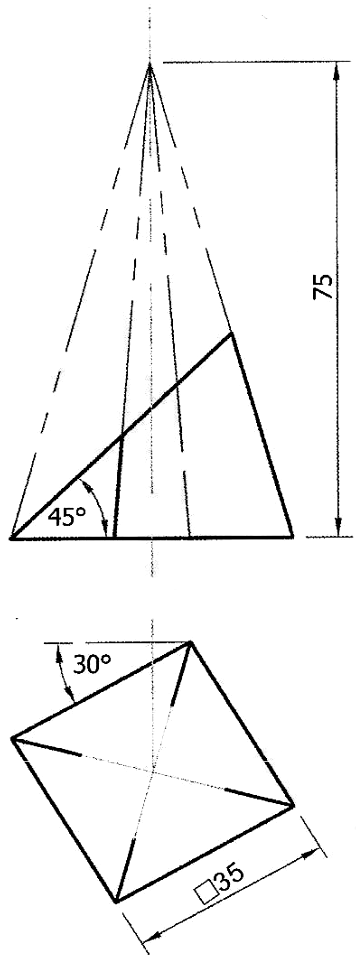

Figure 4

QUESTION 6

Figure 5 shows two views of a block in **First Angle Projection.**

(a) Draw the given views.

(b) Project an auxiliary plan viewed from arrow **M**, showing all hidden details.

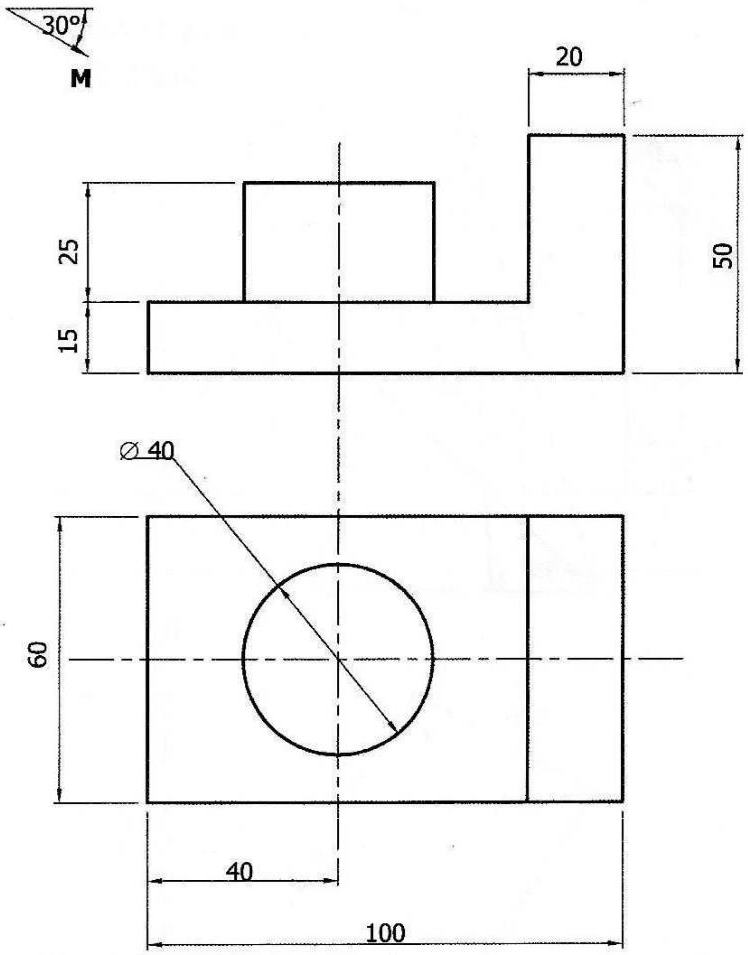

[20]

Figure 5

QUESTION 7

Two views of a Lamina are shown in **Figure 6** below in **First Angle Projection**.

(a) Draw the given views.

(b) Determine and state the true angle of inclination the Lamina makes with the vertical plane.

(c) Draw the true shape of the Lamina.

[20]

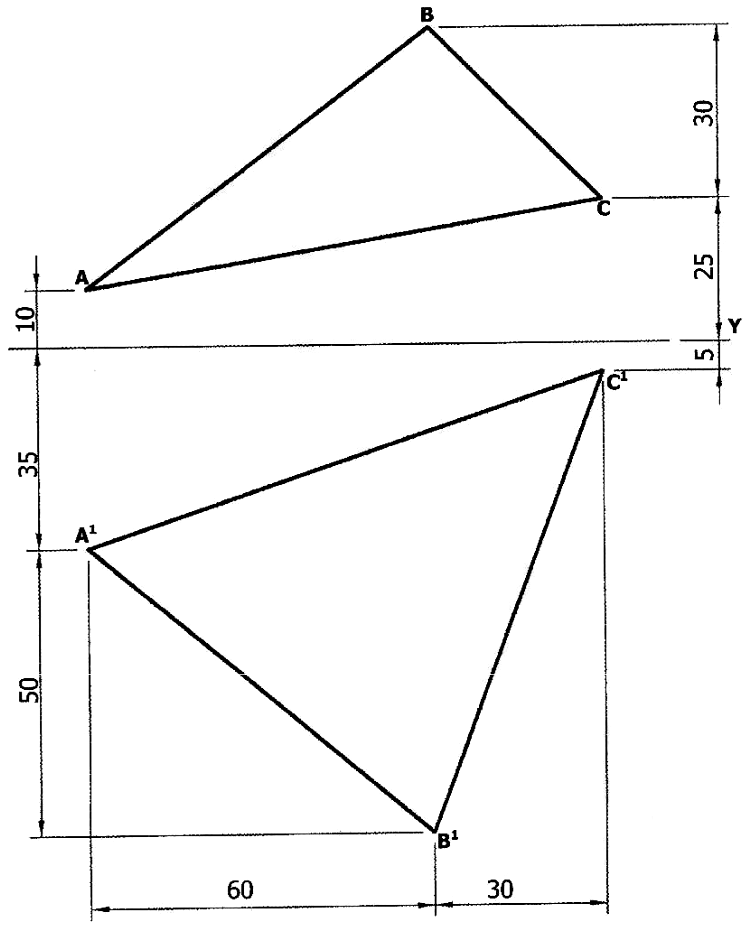

FIGURE 6

QUESTION 8

Figure 7 shows an incomplete plan and elevation of a junction between a cylinder and a sphere in **First Angle Projection**.

(a) Draw and complete the given views.

(b) Draw the surface development of the cylindrical part with the seam along **XX**.

[20]

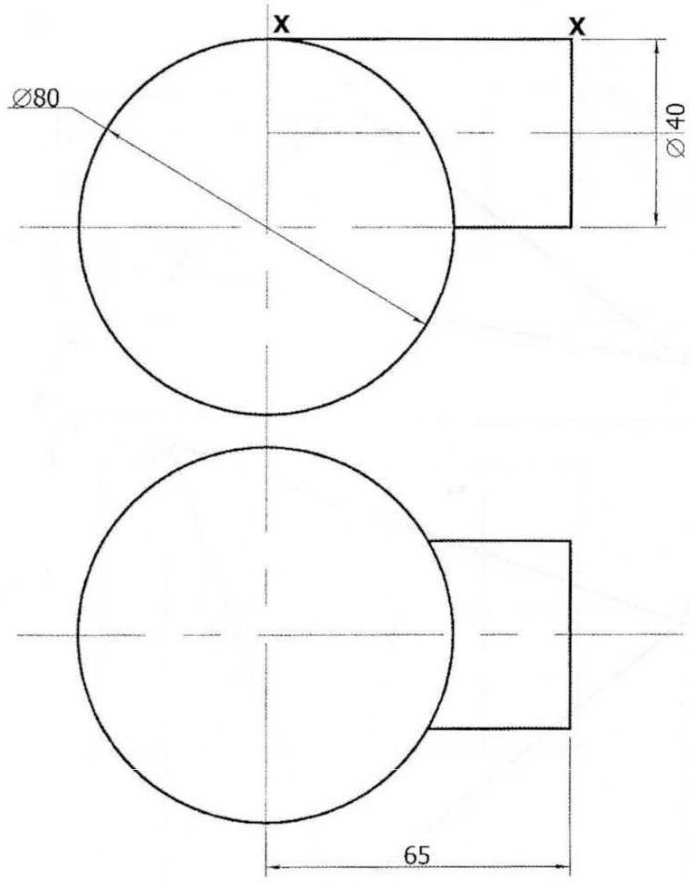

Figure 7