HONDA

PARTS CATALOG

CB1100F '83

2

HONDA MOTOR CO., LTD.
TOKYO, JAPAN

© HONDA MOTOR CO., LTD. 1984

PRINTED IN JAPAN

JANUARY, 1984

14MG5DE2
ⓎA1008401

A 1

CONTENTS

- Contents-Engine group ..... A 1
- Contents-Frame group ..... A 2
- Instruction for use of parts catalog ..... A 3
- Model photograph ..... A 7
- Engine group ..... B 1
- Frame group ..... E 1
- Part No. index ..... L 10

CONTENTS - ENGINE GROUP

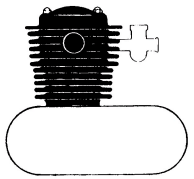

E- 1 Cylinder head cover ..... B 1
E- 2 Cylinder head ..... B 2
E- 3 Camshaft • Valve ..... B 4
E- 4 Cam chain • Tensioner ..... B 6
E- 5 Cylinder ..... B 7

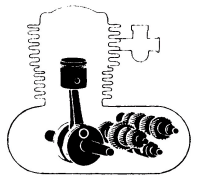

E-14 Crankshaft • Piston ..... C 6
E-15 Primary shaft ..... C 8
E-16 Transmission C10
E-17 Gearshift drum C12

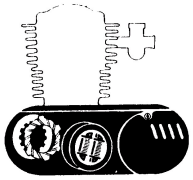

E- 6 Generator ..... B 8
E- 7 Clutch cover ..... B 9
E- 8 Clutch B10
E- 9 Left crankcase cover B11
E-10 Starting motor B12
E-11 Oil pump ..... C 1
E-12 Oil filter • Oil pan ..... C 3
E-13 Crankcase ..... C 4

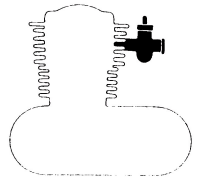

E-18 Carburetor (Assy. • Link) ..... D 1
E-18-1 Carburetor (Component parts) ..... D 2
E-19 Automatic fuel cock ..... D 3

Optional parts

EOP-1 Gasket kit A ..... D 4
EOP-2 Gasket kit B ..... D 5

© HONDA MOTOR CO., LTD. 1983

A 2

CONTENTS - FRAME GROUP

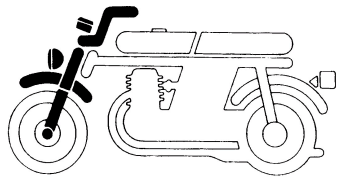

F- 1 Headlight ..... E 1
F- 2 Meter ..... E 3
F- 3 Handle lever • Cable • Switch ..... E 4
F- 4 Front brake master cylinder ..... E 6
F- 5 Handle pipe • Top bridge ..... E 7
F- 6 Steering stem ..... E 9
F- 7 Front fender ..... E 10
F- 8 Front fork ..... E 11

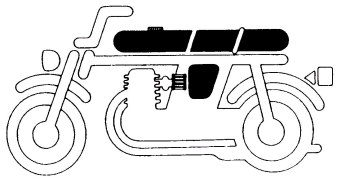

F-14 Fuel tank ..... F 10
F-15 Seat ..... F 11
F-16 Side cover • Spark unit • Regulator ..... F 12
F-17 Battery ..... G 2
F-18 Air cleaner ..... G 3

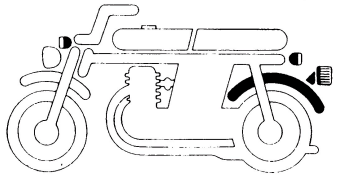

F-25 Rear fender ..... H 2
F-26 Winker ..... H 3
F-27 Taillight ..... H 4

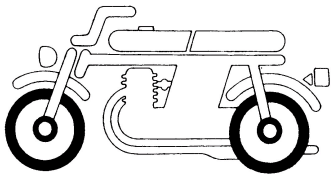

F- 9 Front brake caliper ..... F 2
F-10 Front wheel ..... F 4
F-11 Rear brake master cylinder ..... F 5
F-12 Rear brake caliper ..... F 6
F-13 Rear wheel ..... F 8

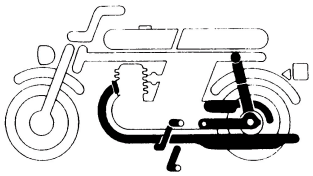

F-19 Exhaust muffler ..... G 5
F-20 Brake pedal • Change pedal ..... G 7
F-21 Step ..... G 8
F-22 Stand G10
F-23 Rear fork • Chain case G11
F-24 Rear cushion ..... H 1

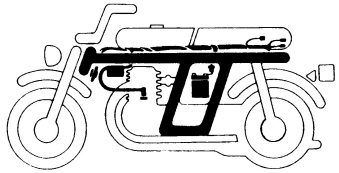

F-28 Wire harness • Ignition coil ..... H 5
F-29 Frame body • Oil cooler ..... H 6
F-30 Tools ..... H 9
F-31 Stripe H10

© HONDA MOTOR CO., LTD. 1983

A 3

INSTRUCTION FOR USE OF PARTS CATALOG

This parts catalog is to be used when ordering replacement parts; it contains all parts for model CB1100F '83.

I. How to order parts

1. HONDA CODE

When placing a parts order with AMERICAN HONDA be sure to use the HONDA CODE (H/C) in conjunction with the part number. The HONDA CODE for each item shown will be listed directly to the left of the part number. Those part numbers without HONDA CODE are not available.

2. Revisions

When modifications or revisions are made for this model, a revised edition will be issued at an appropriate time. The issue date will be printed on the upper right hand corner of each microfiche, or on the cover sheet of the paper catalog on which the edition number and the issue date will be printed at the lower right corner.

When you received a revised edition, discard the old copy. For minor changes, AMERICAN HONDA will issue periodic parts news bulletins advising you of any changes or corrections. Retain these until the revised microfiche or paper catalog is received.

An asterisk (*) will be indicated in front of "Ref. No." for modified or added part when there is some change or addition on the present parts catalog.

3. Multiple parts

Many standard items, SPARK PLUGS, BOLTS, NUTS, WASHERS, PINS, which are in constant use are sold in multiples of ten (10) and consideration when placing your order is advised.

4. Parts return

Parts may not be returned to AMERICAN HONDA without prior written authorization. Written authorization may be obtained by completing an Order Adjustment Request form (PO744) and forwarding it to your parts distribution center. We will correct any discrepancies which are a result of an error on our part. This would cover damaged parts (not caused in mishandling by the delivery service), wrong parts, incorrect quantities, etc. Advise us of discrepancies within twenty-one (21) days from invoice date. AMERICAN HONDA is not responsible for parts that are refused upon delivery or returned without prior authorization.

II. How to read this parts catalog

1. Make-up of the HONDA part number system

(Example) General parts

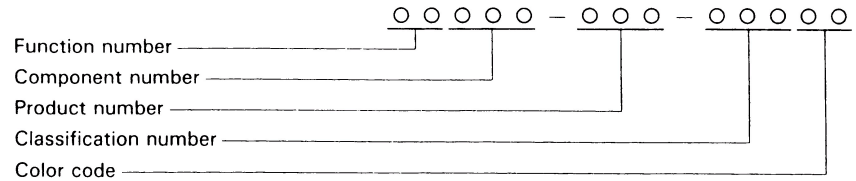

(Example) Bolts, nuts and other standard parts

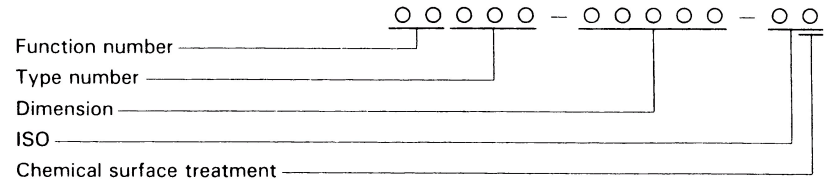

© HONDA MOTOR CO., LTD. 1983

A 4

2. Color code

The color code at the end of the part number indicates the color.

The color description is given in ( ) under the part name in the "Description" column.

3. Dimensions

Dimensions of the parts in this catalog are indicated in millimeter (mm) units.

(Except: Steel balls, tires and tire tubes)

Parts	Example	Interpretation
Bolt (Screw)	6×12	6mm diameter, 12mm length
Pin	8×14	8mm diameter, 14mm length
O-Ring	9.5×1.6	9.5mm diameter, 1.6mm thickness
Oil seal	14×24×5	14mm inside diameter, 24mm outside diameter, 5mm thickness
Tube	5×130	5mm inside diameter, 130mm length

4. Superseded parts

Part number which are given under the part name in the "Description" column indicate that the original part number has been superseded by the given part number. HONDA may make such supersessions without notice.

5. Assemblies

Sections framed with broken lines in the exploded view drawings are available as complete assemblies. (Their individual parts can also be obtained.)

6. Required quantity

The number given in the "Reqd. No." column indicates the quantity of parts used in the section described in that block.

Parts with quantities in ( ) represent optional parts.

Part whose required number is "N", is part whose required number can be selected at need.

7. Abbreviations

The following abbreviations are used in this parts catalog

ASSY.	Assembly	MPH	Miles per hour
COMP.	Complete	L (100L)	Link (100Links)
R.	Right	A.C.	Alternating current
L.	Left	D.C.	Direct current
STD.	Standard	IN	Inlet
MM	Millimeter	EX.	Exhaust
G	Gram	FR.	Front
T (22T)	Tooth (22Teeth)	RR.	Rear
A	Ampere	HEX.	Hexagonal
V	Volt	A.M.	Attaching mark
W	Watt	T.M.	Transcript mark
KPH	Kilometers per hour		

8. Decision for "R." or "L."

"R." or "L." in the description of a part stands for the Right hand side or the Left hand side which is decided by the forward direction of travel of the vehicle.

9. Part modifications and applicable serial numbers

The serial number of the vehicle (frame, engine, carburetor) should be checked prior to ordering parts for a specific vehicle.

In cases where a part has been modified, the serial number of the first vehicle bearing the modification is listed in the "Serial No." column.

The modification parts are controled by each pertinent serial number below:

Engine serial number : Engine group parts (Block No. E-1 thru EOP-2)

Carburetor identification number : Carburetor component parts (Block No. E-18 and E-18-1)

Frame serial number : Frame group parts (Block No. F-1 thru F-31)

© HONDA MOTOR CO., LTD. 1983

A 5

10. Selection table for lock and blank key

Refer to the following selection table to select the lock and blank key.

Type	Key No.
TYPE 1	*01 ——— *20
	A** , B**
TYPE 2	*21 ——— *40
	C** , D**

*: 0, 1, 2, 3, 4, 5, 6, 7, 8 or 9

11. Models and applicable serial numbers

Models and applicable serial Nos. given in this parts catalog can be identified as follows.

Model	Applicable engine serial No.	Applicable frame serial No.	Applicable carburetor identification No.
CB1100F '83	SC11E- 2000001 To Subsequent	SC110* DM000001 To Subsequent	VB56A Ⓐ To Subsequent

* Of carburetor identification numbers, only the portions underlined in the example below are used for registration.

VB56A Ⓐ KC ア

12. Location of stamped serial number

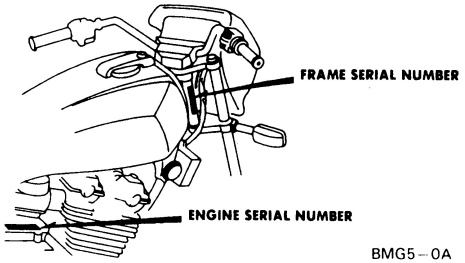

BMG5-0A

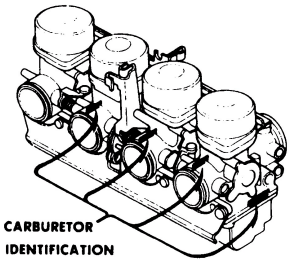

B425-0B

© HONDA MOTOR CO., LTD. 1983

A 6

13. Construction of vehicle identification number (V.I.N.)

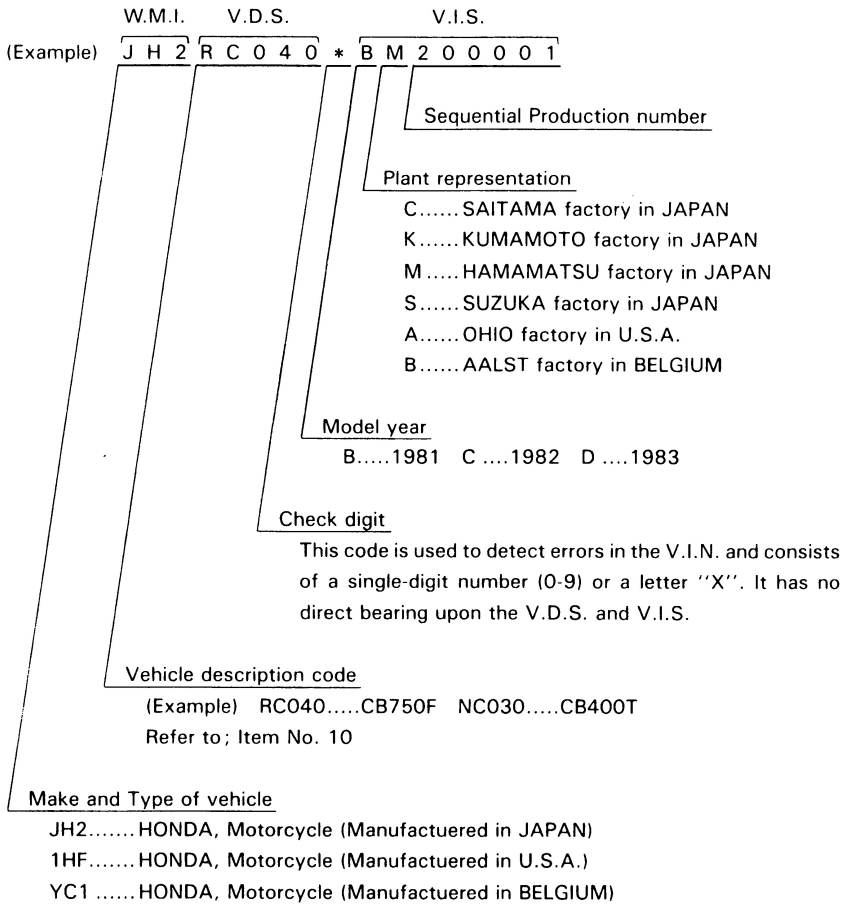

W.M.I. .....World manufactuer identifier
V.D.S. .....Vehicle descriptor section
V.I.S. .....Vehicle indicator section

Any change or modification of parts is directly related to the V.D.S. and V.I.S. A V.I.S. number will appear in the "Serial No." column of the Parts Catalog if a part is changed or modified.

14. This parts catalog is compiled as of December 20, 1983

July 10, 1982
HONDA MOTOR CO., LTD.

© HONDA MOTOR CO., LTD. 1983

A 7

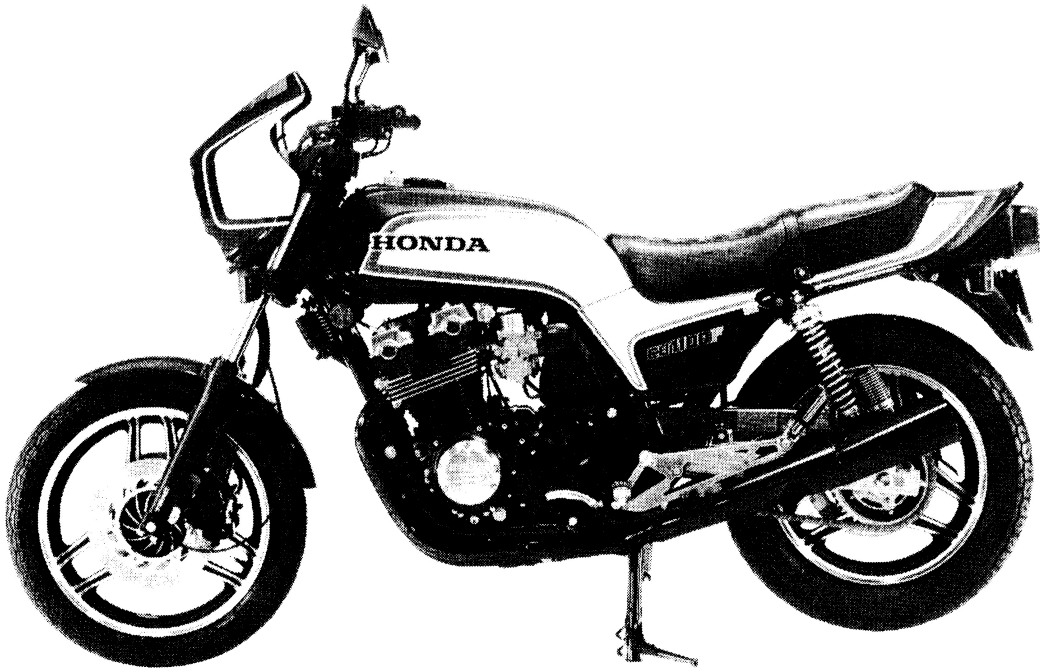

CB1100F '83

● **Catalogs/Manuals information (CB1100F '83)**

H/C	Description	
1304559	CB1100F '83	Owners manual
1331628	CB1100F '83	Shop manual

© HONDA MOTOR CO., LTD. 1983

B 1

Block No.
E-1

Cylinder head cover

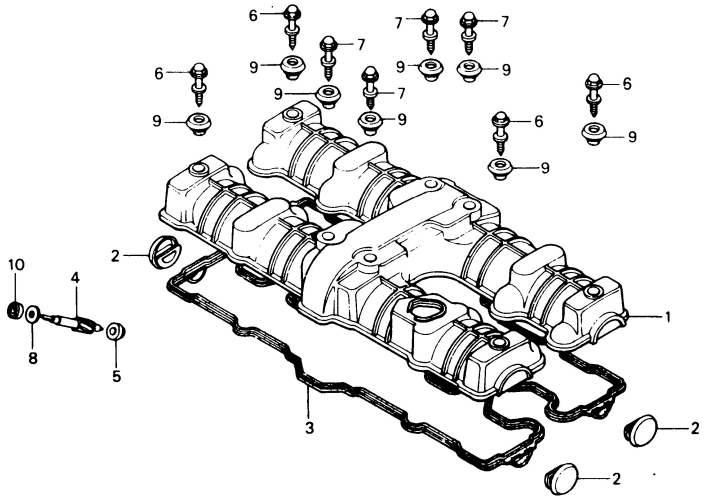

B425-1

CB1100F '83

Air cleaner	G 3	Handle lever	E 4
Battery	G 2	Handle pipe	E 7
Brake caliper FR.	F 2	Handle switch	E 4
Brake caliper RR.	F 6	Headlight	E 1
Brake master cylinder FR.	E 6	Ignition coil	H 5
Brake master cylinder RR.	F 5	Meter	E 3
Brake pedal	G 7	Oil cooler	H 6
Cable	E 4	Oil filter	C 3
Cam chain	B 6	Oil pan	C 3
Cam chain tensioner	B 6	Oil pump	C 1
Camshaft	B 4	Piston	C 6
Carburetor (Assy. • Link)	D 1	Regulator	F 12
Carburetor (Component parts)	D 2	Seat	F 11
Chain case	G11	Side cover	F 12
Change pedal	G 7	Spark unit	F 12
Clutch	B10	Stand	G10
Crankcase	C 4	Starting motor	B12
Crankcase cover L.	B11	Steering stem	E 9
Crankshaft	C 6	Step	G 8
Cushion RR.	H 1	Stripe	H10
Cylinder head	B 2	Taillight	H 4
Cylinder head cover	B 1	Tools	H 9
Exhaust muffler	G 5	Top bridge	E 7
Fender FR.	E10	Transmission	C10
Fender RR.	H 2	Valve	B 4
Fork FR.	E11	Wheel FR.	F 4
Fork RR.	G11	Wheel RR.	F 8
Frame body	H 6	Winker	H 3
Fuel tank	F10	Wire harness	H 5
Gearshift drum	C12		
Generator	B 8		

Ref. No.	H/C	Part No.	Description	Reqd. No. '83	Serial No. From	To	Remarks
1	0909531	12310-461-000	COVER, CYLINDER HEAD	1			
2	0715821	12331-425-000	COVER COMP., CYLINDER HEAD	4			
				SIDE			
3	1049113	12391-425-010	GASKET, CYLINDER HEAD COVER	1			
4	0715847	12432-425-000	GEAR, TACHOMETER	1			
5	0715854	12435-425-000	COLLAR, TACHOMETER GEAR	1			
6	0717249	90017-425-000	BOLT, SPECIAL, 6X27.5	4			
7	0743070	90038-425-000	BOLT, SPECIAL, 6X37	4			
8	0717355	90454-425-000	WASHER, THRUST, 7MM	1			
9	0919860	90541-425-000	RUBBER, MOUNTING	8			
10	0717413	91256-425-003	OIL SEAL, 4.8X14.5X5 (ARAI)	1			
	0770511	91256-425-005	OIL SEAL, 4.8X14.5X5 (NIPPON)	1			

CB1100F '83 Engine No.; SC11E-2000001 To Subsequent

© HONDA MOTOR CO., LTD. 1983

B 2

Block No.
E-2

Cylinder head

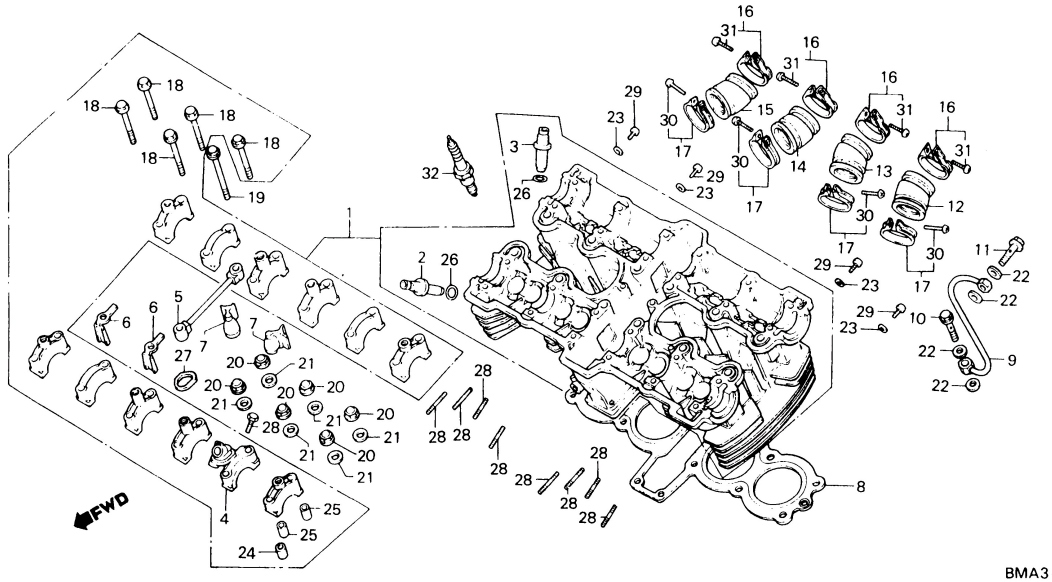

BMA3-1

CB1100F '83

Air cleaner	G 3	Handle lever	E 4
Battery	G 2	Handle pipe	E 7
Brake caliper FR.	F 2	Handle switch	E 4
Brake caliper RR.	F 6	Headlight	E 1
Brake master cylinder FR.	E 6	Ignition coil	H 5
Brake master cylinder RR.	F 5	Meter	E 3
Brake pedal	G 7	Oil cooler	H 6
Cable	E 4	Oil filter	C 3
Cam chain	B 6	Oil pan	C 3
Cam chain tensioner	B 6	Oil pump	C 1
Camshaft	B 4	Piston	C 6
Carburetor (Assy. • Link)	D 1	Regulator	F 12
Carburetor (Component parts)	D 2	Seat	F 11
Chain case	G 11	Side cover	F 12
Change pedal	G 7	Spark unit	F 12
Clutch	B 10	Stand	G 10
Crankcase	C 4	Starting motor	B 12
Crankcase cover L.	B 11	Steering stem	E 9
Crankshaft	C 6	Step	G 8
Cushion RR.	H 1	Stripe	H 10
Cylinder head	B 2	Taillight	H 4
Cylinder head cover	B 1	Tools	H 9
Exhaust muffler	G 5	Top bridge	E 7
Fender FR.	E 10	Transmission	C 10
Fender RR.	H 2	Valve	B 4
Fork FR.	E 11	Wheel FR.	F 4
Fork RR.	G 11	Wheel RR.	F 8
Frame body	H 6	Winker	H 3
Fuel tank	F 10	Wire harness	H 5
Gearshift drum	C 12		
Generator	B 8		

Ref. No.	H/C	Part No.	Description	Reqd. No. '83	Serial No. From	Serial No. To	Remarks
• 1	1304781	12010-MG5-670	HEAD ASSY., CYLINDER 12010-MG5-671	1		2008293	
•	1439421	12010-MG5-671	HEAD ASSY., CYLINDER	1	2008294		
2	1076306	12204-461-305	GUIDE, VALVE	8			
3	1304815	12206-MG5-305	GUIDE, IN. VALVE	8			
• 4	1510932	12213-425-305	HOLDER, CAMSHAFT	1			
5	0715771	12230-425-000	JOINT A, OIL PATH	1			
6	0715789	12241-425-000	PLATE, OIL STOPPER	2			
7	0715797	12242-425-000	CAP, OIL STOPPER	2			
8	1304823	12251-MG5-670	GASKET, CYLINDER HEAD	1			
9	0926212	15520-438-000	PIPE COMP., OIL	1			
10	0915322	15531-425-010	BOLT, OIL CONTROL	1			
11	0915348	15532-425-010	BOLT, OIL	1			
12	0926436	16211-438-000	INSULATOR 1, CARBURETOR	1			
13	0926444	16212-438-000	INSULATOR 2, CARBURETOR	1			
14	0926451	16213-438-000	INSULATOR 3, CARBURETOR	1			
15	0926469	16214-438-000	INSULATOR 4, CARBURETOR	1			
16	0688796	16219-422-000	BAND, INSULATOR	4			
17	0404434	17255-371-000	BAND, IN. MANIFOLD	4			
18	0717256	90018-425-000	BOLT, FLANGE, 6X48	22			
19	0717264	90019-425-000	BOLT, FLANGE, 6X61	2			
20	0823609	90202-438-000	NUT, FLANGE CAP, 10MM	12			
21	0814012	90403-438-003	WASHER, SEALING, 10MM	12			
22	0717348	90441-425-000	WASHER, SEALING, 10MM	4			
23	0255224	90452-323-000	WASHER, THRUST, 5MM	4			
24	0717363	90701-425-000	PIN, DOWEL, 8X26	1			
25	0560540	90705-639-000	PIN, DOWEL, 8X20.5	23			

CB1100F '83 Engine No.; SC11E-2000001 To Subsequent

© HONDA MOTOR CO., LTD. 1983

B 3

Block No.
E-2

Cylinder head

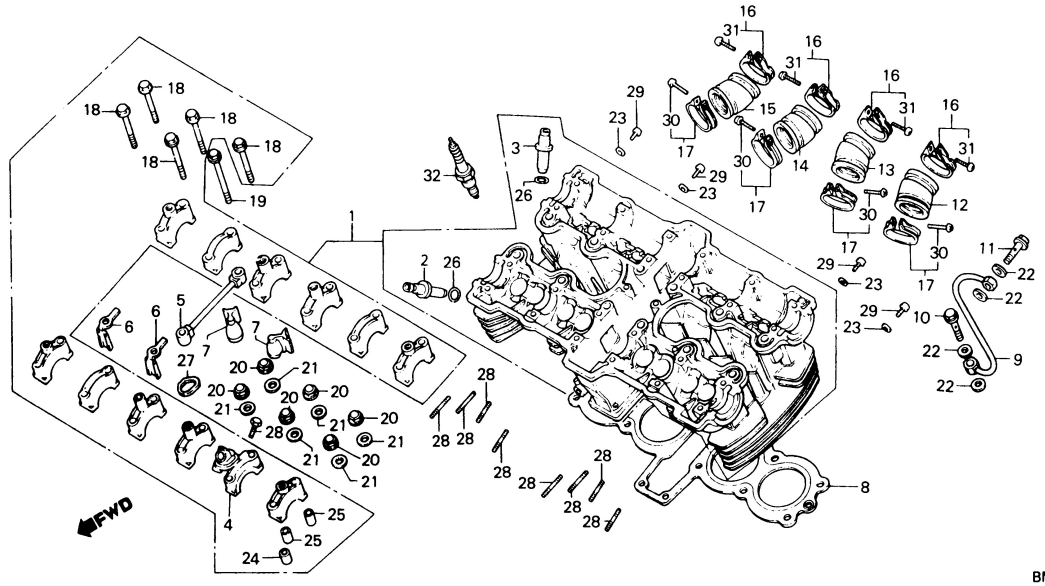

BMA3-1

CB1100F '83

Air cleaner	G 3	Handle lever	E 4
Battery	G 2	Handle pipe	E 7
Brake caliper FR.	F 2	Handle switch	E 4
Brake caliper RR.	F 6	Headlight	E 1
Brake master cylinder FR.	E 6	Ignition coil	H 5
Brake master cylinder RR.	F 5	Meter	E 3
Brake pedal	G 7	Oil cooler	H 6
Cable	E 4	Oil filter	C 3
Cam chain	B 6	Oil pan	C 3
Cam chain tensioner	B 6	Oil pump	C 1
Camshaft	B 4	Piston	C 6
Carburetor (Assy. • Link)	D 1	Regulator	F12
Carburetor (Component parts)	D 2	Seat	F11
Chain case	G11	Side cover	F12
Change pedal	G 7	Spark unit	F12
Clutch	B10	Stand	G10
Crankcase	C 4	Starting motor	B12
Crankcase cover L.	B11	Steering stem	E 9
Crankshaft	C 6	Step	G 8
Cushion RR.	H 1	Stripe	H10
Cylinder head	B 2	Taillight	H 4
Cylinder head cover	B 1	Tools	H 9
Exhaust muffler	G 5	Top bridge	E 7
Fender FR.	E10	Transmission	C10
Fender RR.	H 2	Valve	B 4
Fork FR.	E11	Wheel FR.	F 4
Fork RR.	G11	Wheel RR.	F 8
Frame body	H 6	Winker	H 3
Fuel tank	F10	Wire harness	H 5
Gearshift drum	C12		
Generator	B 8		

Ref. No.	H/C	Part No.	Description	Reqd. No. '83	Serial No. From	Serial No. To	Remarks
26	0022673	91301-200-000	O-RING, 10X1.6	16			
27	0717439	91311-425-000	O-RING, CAMSHAFT HOLDER	1			
•28	0743088	92700-08055-0E	BOLT, STUD, 8X55	8		2005119	
•	1372531	90011-MG5-670	BOLT, STUD, 8X55	8	2005120		
29	0145540	93500-05008-0A	SCREW, PAN, 5X8	4			
30	0294181	93500-05020-0G	SCREW, PAN, 5X20	4			
31	0477471	93500-05025-0G	SCREW, PAN, 5X25	4			
32	0961110	98069-58716	PLUG, SPARK (DR8ES NGK)	4			
	0961128	98069-59726	PLUG, SPARK (X27ESR-U ND)	4			
	1311521	98069-60726	PLUG, SPARK (X31ESR-U ND)	(4)			

CB1100F '83 Engine No.; SC11E-2000001 To Subsequent

© HONDA MOTOR CO., LTD. 1983

* ( ) IN THE REQD. NO. COLUMN INDICATES AN OPTIONAL PART OR A SELECTIVE PART.

B 4

Block No.
E-3

Camshaft • Valve

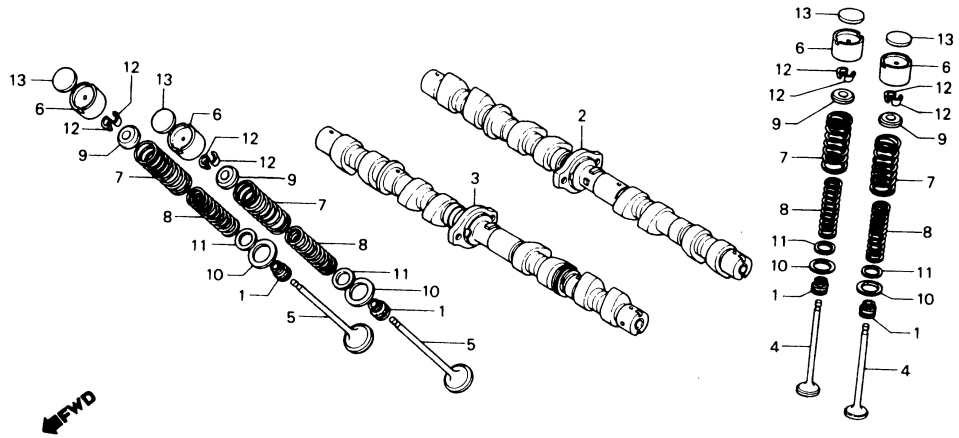

B425-3

CB1100F '83

Air cleaner	G 3	Handle lever	E 4
Battery	G 2	Handle pipe	E 7
Brake caliper FR.	F 2	Handle switch	E 4
Brake caliper RR.	F 6	Headlight	E 1
Brake master cylinder FR.	E 6	Ignition coil	H 5
Brake master cylinder RR.	F 5	Meter	E 3
Brake pedal	G 7	Oil cooler	H 6
Cable	E 4	Oil filter	C 3
Cam chain	B 6	Oil pan	C 3
Cam chain tensioner	B 6	Oil pump	C 1
Camshaft	B 4	Piston	C 6
Carburetor (Assy. • Link)	D 1	Regulator	F 12
Carburetor (Component parts)	D 2	Seat	F 11
Chain case	G11	Side cover	F 12
Change pedal	G 7	Spark unit	F 12
Clutch	B10	Stand	G10
Crankcase	C 4	Starting motor	B12
Crankcase cover L.	B11	Steering stem	E 9
Crankshaft	C 6	Step	G 8
Cushion RR.	H 1	Stripe	H10
Cylinder head	B 2	Taillight	H 4
Cylinder head cover	B 1	Tools	H 9
Exhaust muffler	G 5	Top bridge	E 7
Fender FR.	E10	Transmission	C10
Fender RR.	H 2	Valve	B 4
Fork FR.	E11	Wheel FR.	F 4
Fork RR.	G11	Wheel RR.	F 8
Frame body	H 6	Winker	H 3
Fuel tank	F 10	Wire harness	H 5
Gearshift drum	C12		
Generator	B 8		

Ref. No.	H/C	Part No.	Description	Reqd. No. '83	Serial No. From	To	Remarks
1	0688887	12209-422-005	SEAL, VALVE STEM	16			
2	1305077	14100-MG5-670	CAMSHAFT COMP., IN.	1			
3	1305085	14200-MG5-670	CAMSHAFT COMP., EX.	1			
4	0926139	14711-438-000	VALVE, IN.	8			
5	0926147	14721-438-000	VALVE, EX.	8			
6	1305150	14731-MA3-000	LIFTER, VALVE	16			
7	1305168	14751-MA3-003	SPRING, VALVE OUTER	16			
8	1305176	14761-MA3-003	SPRING, VALVE INNER	16			
9	0280149	14771-329-000	RETAINER, VALVE SPRING	16			
10	0689018	14775-422-000	SEAT, VALVE SPRING OUTER	16			
11	0689026	14776-422-000	SEAT, VALVE SPRING INNER	16			
12	0822478	14781-107-003	COTTER, VALVE (SANKO)	32			
13	0689034	14901-422-000	SHIM, TAPPET (2.30)	16			
	0689042	14903-422-000	SHIM, TAPPET (2.35)	16			
	0689059	14905-422-000	SHIM, TAPPET (2.40)	16			
	0689067	14907-422-000	SHIM, TAPPET (2.45)	16			
	0689075	14909-422-000	SHIM, TAPPET (2.50)	16			
	0689083	14911-422-000	SHIM, TAPPET (2.55)	16			
	0689091	14913-422-000	SHIM, TAPPET (2.60)	16			
	0689109	14915-422-000	SHIM, TAPPET (2.65)	16			
	0689117	14917-422-000	SHIM, TAPPET (2.70)	16			
	0689125	14919-422-000	SHIM, TAPPET (2.75)	16			
	0689133	14921-422-000	SHIM, TAPPET (2.80)	16			
	0689141	14923-422-000	SHIM, TAPPET (2.85)	16			
	0689158	14925-422-000	SHIM, TAPPET (2.90)	16			
	0689166	14927-422-000	SHIM, TAPPET (2.95)	16			
	0689174	14929-422-000	SHIM, TAPPET (3.00)	16			
	0689182	14931-422-000	SHIM, TAPPET (3.05)	16			
	0689190	14933-422-000	SHIM, TAPPET (3.10)	16			
	0689208	14935-422-000	SHIM, TAPPET (3.15)	16			

CB1100F '83 Engine No.; SC11E-2000001 To Subsequent

© HONDA MOTOR CO., LTD. 1983

B 5

Block No.
E-3

Camshaft • Valve

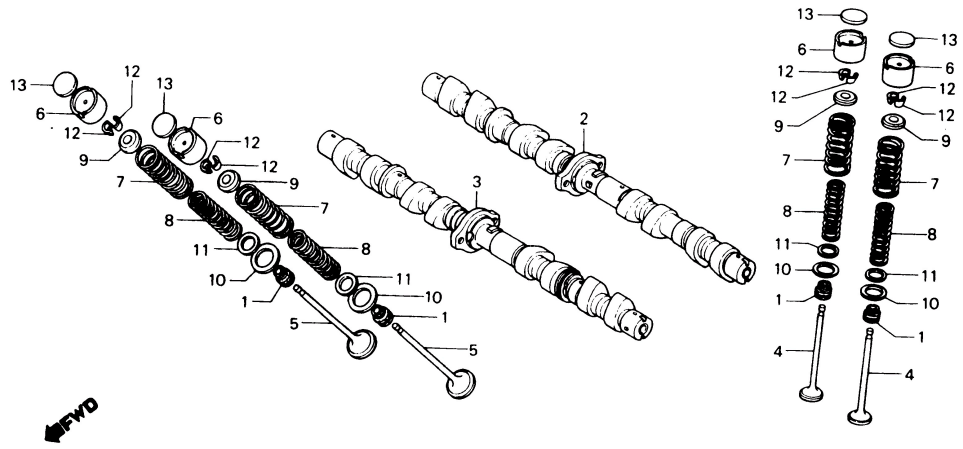

B425-3

CB1100F '83

Air cleaner	G 3	Handle lever	E 4
Battery	G 2	Handle pipe	E 7
Brake caliper FR.	F 2	Handle switch	E 4
Brake caliper RR.	F 6	Headlight	E 1
Brake master cylinder FR.	E 6	Ignition coil	H 5
Brake master cylinder RR.	F 5	Meter	E 3
Brake pedal	G 7	Oil cooler	H 6
Cable	E 4	Oil filter	C 3
Cam chain	B 6	Oil pan	C 3
Cam chain tensioner	B 6	Oil pump	C 1
Camshaft	B 4	Piston	C 6
Carburetor (Assy. • Link)	D 1	Regulator	F12
Carburetor (Component parts)	D 2	Seat	F11
Chain case	G11	Side cover	F12
Change pedal	G 7	Spark unit	F12
Clutch	B10	Stand	G10
Crankcase	C 4	Starting motor	B12
Crankcase cover L.	B11	Steering stem	E 9
Crankshaft	C 6	Step	G 8
Cushion RR.	H 1	Stripe	H10
Cylinder head	B 2	Taillight	H 4
Cylinder head cover	B 1	Tools	H 9
Exhaust muffler	G 5	Top bridge	E 7
Fender FR.	E10	Transmission	C10
Fender RR.	H 2	Valve	B 4
Fork FR.	E11	Wheel FR.	F 4
Fork RR.	G11	Wheel RR.	F 8
Frame body	H 6	Winker	H 3
Fuel tank	F10	Wire harness	H 5
Gearshift drum	C12		
Generator	B 8		

Ref. No.	H/C	Part No.	Description	Reqd. No. '83	Serial No. From	To	Remarks
	0689216	14937-422-000	SHIM, TAPPET (3.20)	16			
	0689224	14939-422-000	SHIM, TAPPET (3.25)	16			
	0689232	14941-422-000	SHIM, TAPPET (3.30)	16			
	0689240	14943-422-000	SHIM, TAPPET (3.35)	16			
	0689257	14945-422-000	SHIM, TAPPET (3.40)	16			
	0689265	14947-422-000	SHIM, TAPPET (3.45)	16			
	0689273	14949-422-000	SHIM, TAPPET (3.50)	16			

CB1100F '83 Engine No.; SC11E-2000001 To Subsequent

© HONDA MOTOR CO., LTD. 1983

Block No.
E-4

Cam chain • Tensioner

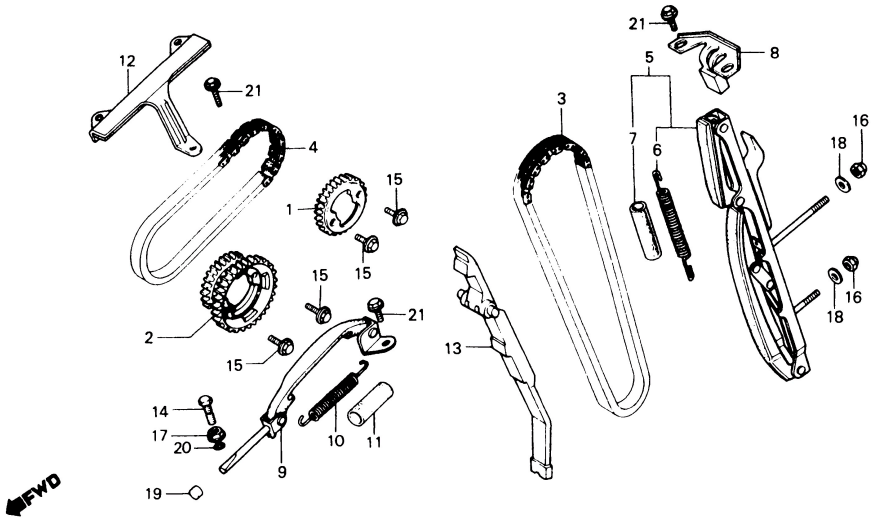

BMA3-50A

CB1100F '83

Air cleaner	G 3	Handle lever	E 4
Battery	G 2	Handle pipe	E 7
Brake caliper FR.	F 2	Handle switch	E 4
Brake caliper RR.	F 6	Headlight	E 1
Brake master cylinder FR.	E 6	Ignition coil	H 5
Brake master cylinder RR.	F 5	Meter	E 3
Brake pedal	G 7	Oil cooler	H 6
Cable	E 4	Oil filter	C 3
Cam chain	B 6	Oil pan	C 3
Cam chain tensioner	B 6	Oil pump	C 1
Camshaft	B 4	Piston	C 6
Carburetor (Assy. • Link)	D 1	Regulator	F 12
Carburetor (Component parts)	D 2	Seat	F 11
Chain case	G 11	Side cover	F 12
Change pedal	G 7	Spark unit	F 12
Clutch	B 10	Stand	G 10
Crankcase	C 4	Starting motor	B 12
Crankcase cover L.	B 11	Steering stem	E 9
Crankshaft	C 6	Step	G 8
Cushion RR.	H 1	Stripe	H 10
Cylinder head	B 2	Taillight	H 4
Cylinder head cover	B 1	Tools	H 9
Exhaust muffler	G 5	Top bridge	E 7
Fender FR.	E 10	Transmission	C 10
Fender RR.	H 2	Valve	B 4
Fork FR.	E 11	Wheel FR.	F 4
Fork RR.	G 11	Wheel RR.	F 8
Frame body	H 6	Winker	H 3
Fuel tank	F 10	Wire harness	H 5
Gearshift drum	C 12		
Generator	B 8		

Ref. No.	H/C	Part No.	Description	Reqd. No. '83	Serial No. From	Serial No. To	Remarks
1	1305093	14321-MA3-000	SPROCKET, IN. CAM	1			
2	1305101	14322-MA3-000	SPROCKET, EX. CAM	1			
3	1287903	14401-MA3-003	CHAIN A, CAM	1			
4	1287929	14402-MA3-003	CHAIN B, CAM	1			
5	1287937	14500-MG1-670	TENSIONER COMP. A, CAM CHAIN	1			
6	1287945	14518-MA3-620	SPRING A, CAM CHAIN TENSIONER	1			
7	1287952	14519-MA3-620	TUBE, CAM CHAIN TENSIONER SPRING	1			
8	0926113	14521-438-000	PLATE, CAM CHAIN TENSIONER SETTING	1			
9	1305119	14530-MG5-670	TENSIONER COMP. B, CAM CHAIN	1			
•10	1319003	14538-MG5-670	SPRING B, CAM CHAIN TENSIONER	1			
11	1311869	14539-MG5-670	TUBE, CAM CHAIN TENSIONER SPRING (B)	1			
12	1305135	14541-MA3-000	GUIDE B, CAM CHAIN	1			
13	1305143	14620-MA3-000	GUIDE, CAM CHAIN	1			
14	0873992	90021-469-000	BOLT, TENSIONER ADJUSTING	1			
15	1243450	90026-MB0-000	BOLT, UBS, 7X15	4			
•16	0670729	90201-415-000	NUT, CAP, 6MM	2			
17	0874008	90202-469-000	NUT, FLANGE, 10MM	1			
18	0163600	90441-706-000	WASHER, SEALING, 6MM	2			
19	0689414	91208-422-003	PLUG, SEALING, 11.5X7	1			
20	0446922	91313-393-003	O-RING, 7.8X2.2	1			
•21	0840587	95700-06014-08	BOLT, FLANGE, 6X14	3		2008293	
				2	2008294		

CB1100F '83 Engine No.; SC11E-2000001 To Subsequent

© HONDA MOTOR CO., LTD. 1983

B 7

Block No.
E-5

Cylinder

CB1100F '83

Air cleaner	G 3	Handle lever	E 4
Battery	G 2	Handle pipe	E 7
Brake caliper FR.	F 2	Handle switch	E 4
Brake caliper RR.	F 6	Headlight	E 1
Brake master cylinder FR.	E 6	Ignition coil	H 5
Brake master cylinder RR.	F 5	Meter	E 3
Brake pedal	G 7	Oil cooler	H 6
Cable	E 4	Oil filter	C 3
Cam chain	B 6	Oil pan	C 3
Cam chain tensioner	B 6	Oil pump	C 1
Camshaft	B 4	Piston	C 6
Carburetor (Assy. • Link)	D 1	Regulator	F12
Carburetor (Component parts)	D 2	Seat	F11
Chain case	G11	Side cover	F12
Change pedal	G 7	Spark unit	F12
Clutch	B10	Stand	G10
Crankcase	C 4	Starting motor	B12
Crankcase cover L.	B11	Steering stem	E 9
Crankshaft	C 6	Step	G 8
Cushion RR.	H 1	Stripe	H10
Cylinder head	B 2	Taillight	H 4
Cylinder head cover	B 1	Tools	H 9
Exhaust muffler	G 5	Top bridge	E 7
Fender FR.	E10	Transmission	C10
Fender RR.	H 2	Valve	B 4
Fork FR.	E11	Wheel FR.	F 4
Fork RR.	G11	Wheel RR.	F 8
Frame body	H 6	Winker	H 3
Fuel tank	F10	Wire harness	H 5
Gearshift drum	C12		
Generator	B 8		

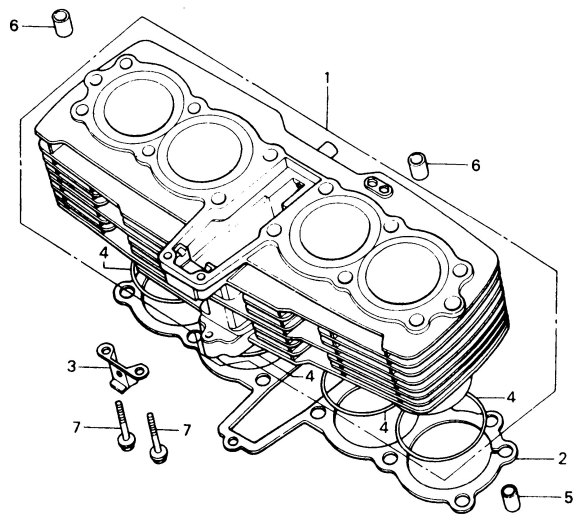

BMA3-3

Ref. No.	H/C	Part No.	Description	Reqd. No. '83	Serial No. From	To	Remarks
• 1	1304799	12100-MG5-670	CYLINDER COMP.	1			
2	1304807	12191-MG5-670	GASKET, CYLINDER	1			
3	1305192	15528-MG5-670	HOLDER C, OIL HOSE	1			
4	0153296	91304-287-000	O-RING, 69.8X2.0	4			
5	0058206	94301-10160	PIN A, DOWEL, 10X16	2			
6	0165324	94301-12200	PIN A, DOWEL, 12X20	2			
7	0484477	95700-06032-00	BOLT, FLANGE, 6X32	2			

CB1100F '83 Engine No.; SC11E-2000001 To Subsequent

© HONDA MOTOR CO., LTD. 1983

B 8

Block No.
E-6

Generator

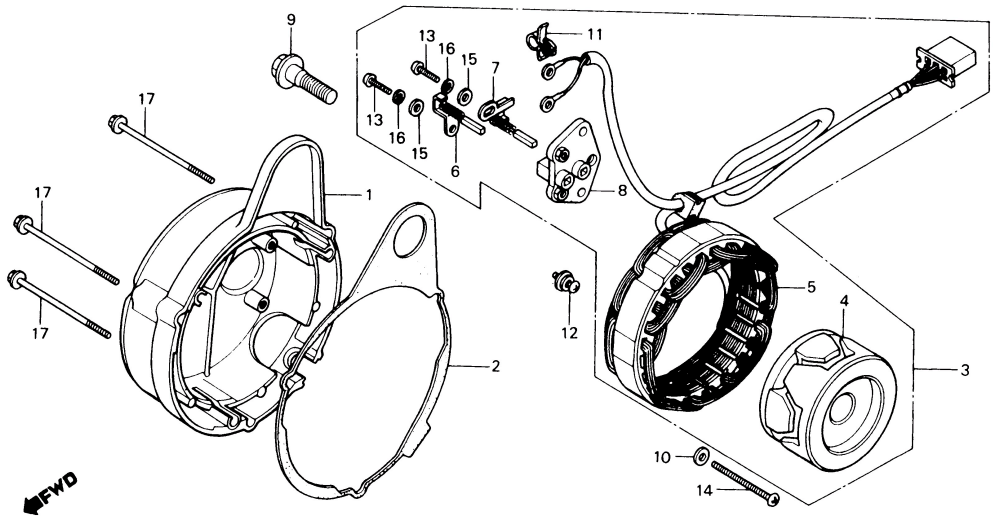

B425-6

CB1100F '83

Air cleaner	G 3	Handle lever	E 4
Battery	G 2	Handle pipe	E 7
Brake caliper FR.	F 2	Handle switch	E 4
Brake caliper RR.	F 6	Headlight	E 1
Brake master cylinder FR.	E 6	Ignition coil	H 5
Brake master cylinder RR.	F 5	Meter	E 3
Brake pedal	G 7	Oil cooler	H 6
Cable	E 4	Oil filter	C 3
Cam chain	B 6	Oil pan	C 3
Cam chain tensioner	B 6	Oil pump	C 1
Camshaft	B 4	Piston	C 6
Carburetor (Assy. • Link)	D 1	Regulator	F 12
Carburetor (Component parts)	D 2	Seat	F 11
Chain case	G11	Side cover	F 12
Change pedal	G 7	Spark unit	F 12
Clutch	B10	Stand	G10
Crankcase	C 4	Starting motor	B12
Crankcase cover L.	B11	Steering stem	E 9
Crankshaft	C 6	Step	G 8
Cushion RR.	H 1	Stripe	H10
Cylinder head	B 2	Taillight	H 4
Cylinder head cover	B 1	Tools	H 9
Exhaust muffler	G 5	Top bridge	E 7
Fender FR.	E10	Transmission	C10
Fender RR.	H 2	Valve	B 4
Fork FR.	E11	Wheel FR.	F 4
Fork RR.	G11	Wheel RR.	F 8
Frame body	H 6	Winker	H 3
Fuel tank	F 10	Wire harness	H 5
Gearshift drum	C12		
Generator	B 8		

Ref. No.	H/C	Part No.	Description	Reqd. No. '83	Serial No. From	To	Remarks
1	1304765	11631-MG5-670	COVER, A.C. GENERATOR	1			
2	0923524	11691-425-010	PACKING, A.C. GENERATOR COVER	1			
3	1311919	31100-MG5-005	GENERATOR ASSY., A.C.	1			
4	1311927	31110-MG5-005	ROTOR COMP.	1			
5	1311935	31120-MG5-005	STATOR COMP.	1			
• 6	1372465	31124-MG5-000	BRUSH COMP. A	1			
7	1311943	31125-MG5-005	BRUSH COMP. B	1			
• 8	0768986	31126-422-015	BASE, BRUSH	1			
9	0717280	90023-425-000	BOLT, FLANGE, 12X40	1			
10	0202325	90563-304-000	WASHER, NUMBER PLATE MOUNTING	3			
11	0720987	90659-170-000	CLIP, CABLE	1			
• 12	1188580	91492-425-000	BOLT-WASHER, 6X16	2			
13	0285643	93500-04012-0H	SCREW, PAN, 4X12	2			
• 14	0057638	93500-06045	SCREW, PAN, 6X45	3			
15	0331462	94101-04800	WASHER, PLAIN, 4MM	2			
16	0346114	94111-04800	WASHER, SPRING, 4MM	2			
17	1096809	96000-06070-02	BOLT, FLANGE, 6X70	3			

CB1100F '83 Engine No.; SC11E-2000001 To Subsequent

© HONDA MOTOR CO., LTD. 1983

B 9

Block No.
E-7

Clutch cover

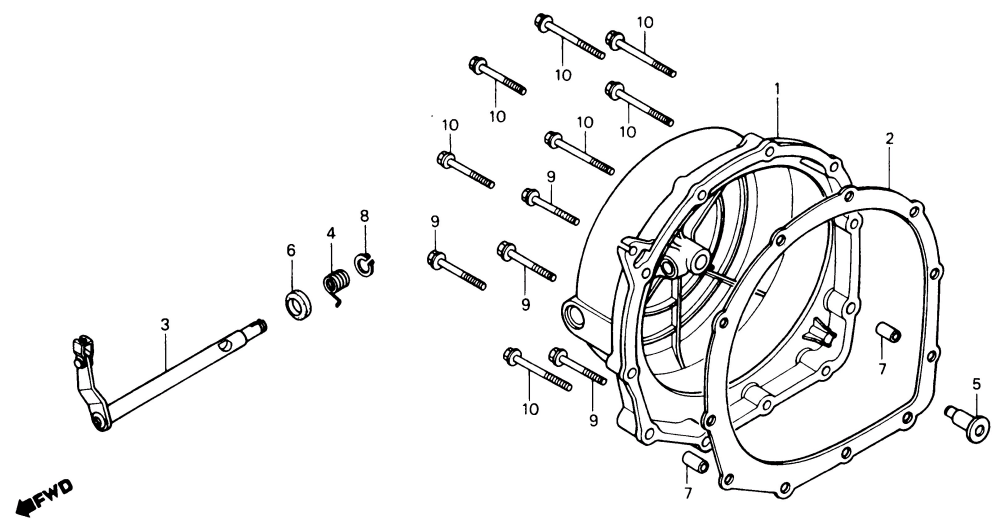

BMG5 – 1

Ref. No.	H/C	Part No.	Description	Reqd. No. '83	Serial No. From	To	Remarks
1	1304674	11330-MG5-670	COVER COMP., CLUTCH	1			
2	0715664	11396-425-000	GASKET, CLUTCH COVER	1			
3	1305564	22710-MG5-670	LEVER COMP., CLUTCH	1			
4	1305572	22815-MG5-670	SPRING, CLUTCH LEVER	1			
5	1311885	22850-MG5-670	ROD, CLUTCH LIFTER	1			
6	0803072	91202-444-005	OIL SEAL, 14X24X6	1			
7	0069310	94301-08140	PIN A, DOWEL, 8X14	2			
8	0156992	94510-10000	CIRCLIP, EXTERNAL, 10	1			
9	1311463	96000-06032-02	BOLT, FLANGE, 6X32	4			
10	0911974	96000-06040-02	BOLT, FLANGE, 6X40	7			

CB1100F '83

Air cleaner	G 3	Handle lever	E 4
Battery	G 2	Handle pipe	E 7
Brake caliper FR.	F 2	Handle switch	E 4
Brake caliper RR.	F 6	Headlight	E 1
Brake master cylinder FR.	E 6	Ignition coil	H 5
Brake master cylinder RR.	F 5	Meter	E 3
Brake pedal	G 7	Oil cooler	H 6
Cable	E 4	Oil filter	C 3
Cam chain	B 6	Oil pan	C 3
Cam chain tensioner	B 6	Oil pump	C 1
Camshaft	B 4	Piston	C 6
Carburetor (Assy. • Link)	D 1	Regulator	F 12
Carburetor (Component parts)	D 2	Seat	F 11
Chain case	G11	Side cover	F 12
Change pedal	G 7	Spark unit	F 12
Clutch	B10	Stand	G10
Crankcase	C 4	Starting motor	B12
Crankcase cover L.	B11	Steering stem	E 9
Crankshaft	C 6	Step	G 8
Cushion RR.	H 1	Stripe	H10
Cylinder head	B 2	Taillight	H 4
Cylinder head cover	B 1	Tools	H 9
Exhaust muffler	G 5	Top bridge	E 7
Fender FR.	E10	Transmission	C10
Fender RR.	H 2	Valve	B 4
Fork FR.	E11	Wheel FR.	F 4
Fork RR.	G11	Wheel RR.	F 8
Frame body	H 6	Winker	H 3
Fuel tank	F 10	Wire harness	H 5
Gearshift drum	C12		
Generator	B 8		

CB1100F '83 Engine No.; SC11E – 2000001 To Subsequent

© HONDA MOTOR CO., LTD. 1983

B 10

Block No.
E-8

Clutch

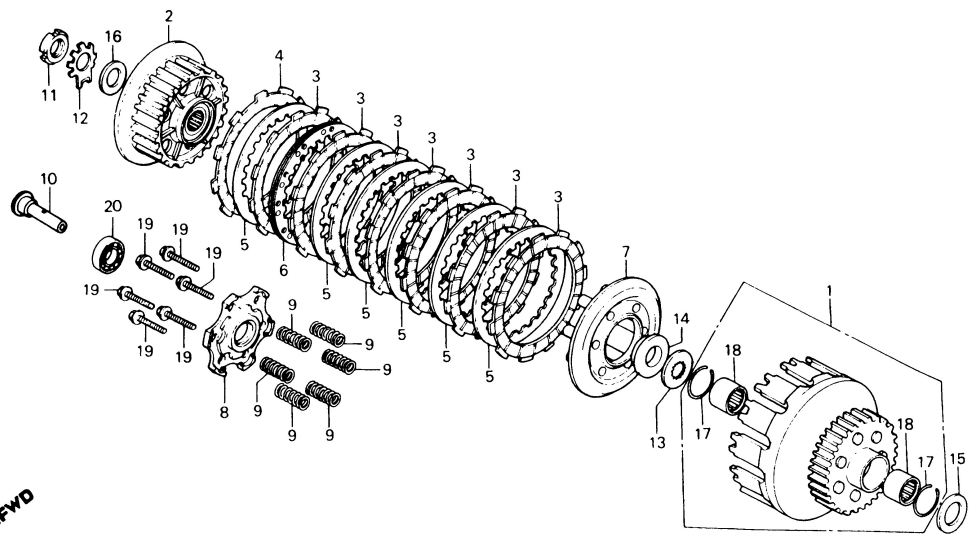

BMG5-2

CB1100F '83

Air cleaner	G 3	Handle lever	E 4
Battery	G 2	Handle pipe	E 7
Brake caliper FR.	F 2	Handle switch	E 4
Brake caliper RR.	F 6	Headlight	E 1
Brake master cylinder FR.	E 6	Ignition coil	H 5
Brake master cylinder RR.	F 5	Meter	E 3
Brake pedal	G 7	Oil cooler	H 6
Cable	E 4	Oil filter	C 3
Cam chain	B 6	Oil pan	C 3
Cam chain tensioner	B 6	Oil pump	C 1
Camshaft	B 4	Piston	C 6
Carburetor (Assy. • Link)	D 1	Regulator	F 12
Carburetor (Component parts)	D 2	Seat	F 11
Chain case	G11	Side cover	F 12
Change pedal	G 7	Spark unit	F 12
Clutch	B10	Stand	G10
Crankcase	C 4	Starting motor	B12
Crankcase cover L.	B11	Steering stem	E 9
Crankshaft	C 6	Step	G 8
Cushion RR.	H 1	Stripe	H10
Cylinder head	B 2	Taillight	H 4
Cylinder head cover	B 1	Tools	H 9
Exhaust muffler	G 5	Top bridge	E 7
Fender FR.	E10	Transmission	C10
Fender RR.	H 2	Valve	B 4
Fork FR.	E11	Wheel FR.	F 4
Fork RR.	G11	Wheel RR.	F 8
Frame body	H 6	Winker	H 3
Fuel tank	F 10	Wire harness	H 5
Gearshift drum	C12		
Generator	B 8		

Ref. No.	H/C	Part No.	Description	Reqd. No. '83	Serial No. From	To	Remarks
1	1305531	22100-MG5-670	OUTER COMP., CLUTCH	1			
2	1311877	22120-MG5-670	CENTER, CLUTCH	1			
3	0716589	22201-425-000	DISK A, CLUTCH FRICTION	7			
4	0716597	22202-425-000	DISK B, CLUTCH FRICTION	1			
5	0716605	22321-425-000	PLATE, CLUTCH	6			
6	0716613	22322-425-000	PLATE COMP. B, CLUTCH	1			
7	0716621	22350-425-000	PLATE, CLUTCH PRESSURE	1			
8	1305549	22361-MG1-670	PLATE, CLUTCH LIFTER	1			
9	1305556	22401-MG5-670	SPRING, CLUTCH	6			
10	1305580	22843-MG5-670	GUIDE, CLUTCH LIFTER	1			
11	0026757	90231-200-010	NUT, LOCK, 16MM	1			
12	0151647	90431-292-000	WASHER, LOCK, 16MM	1			
13	1311166	90432-MG5-670	WASHER, SPLINE, 23MM	1			
14	0717330	90432-425-000	COLLAR, CLUTCH	1			
15	0291229	90455-333-010	WASHER, THRUST, 25MM	1			
16	0151654	90481-292-000	WASHER, OIL FILTER ROTOR LOCK	1			
17	1290709	90602-MA3-300	CLIP, BEARING STOPPER	2			
18	1290717	91010-MA3-003	BEARING, NEEDLE, 25X32X16	2			
19	0671255	95725-06025-00	BOLT, FLANGE, 6X25	6			
20	0104000	96100-60030	BEARING, RADIAL BALL, 6003	1			

CB1100F '83 Engine No.; SC11E-2000001 To Subsequent

© HONDA MOTOR CO., LTD. 1983

B 11

Block No.
E-9

Left crankcase cover

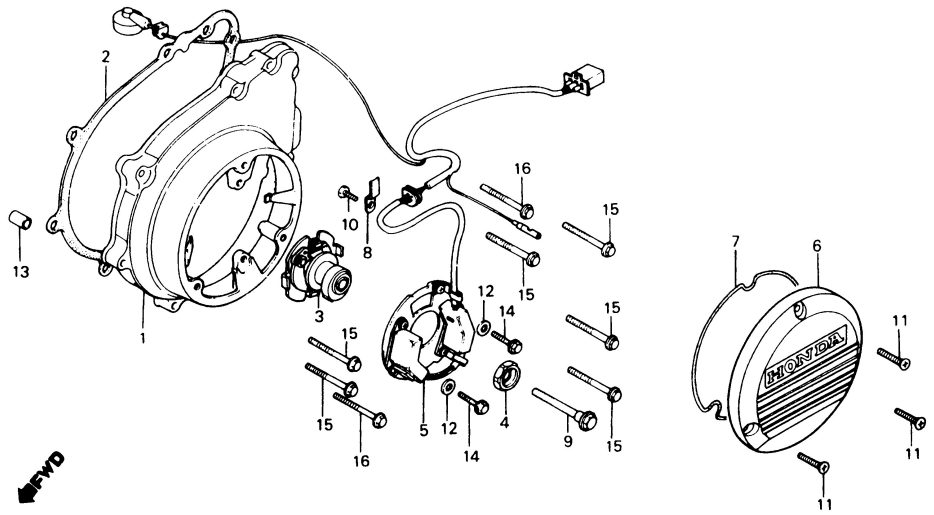

BMG5-3

CB1100F '83

Air cleaner	G 3	Handle lever	E 4
Battery	G 2	Handle pipe	E 7
Brake caliper FR.	F 2	Handle switch	E 4
Brake caliper RR.	F 6	Headlight	E 1
Brake master cylinder FR.	E 6	Ignition coil	H 5
Brake master cylinder RR.	F 5	Meter	E 3
Brake pedal	G 7	Oil cooler	H 6
Cable	E 4	Oil filter	C 3
Cam chain	B 6	Oil pan	C 3
Cam chain tensioner	B 6	Oil pump	C 1
Camshaft	B 4	Piston	C 6
Carburetor (Assy. • Link)	D 1	Regulator	F12
Carburetor (Component parts)	D 2	Seat	F11
Chain case	G11	Side cover	F12
Change pedal	G 7	Spark unit	F12
Clutch	B10	Stand	G10
Crankcase	C 4	Starting motor	B12
Crankcase cover L.	B11	Steering stem	E 9
Crankshaft	C 6	Step	G 8
Cushion RR.	H 1	Stripe	H10
Cylinder head	B 2	Taillight	H 4
Cylinder head cover	B 1	Tools	H 9
Exhaust muffler	G 5	Top bridge	E 7
Fender FR.	E10	Transmission	C10
Fender RR.	H 2	Valve	B 4
Fork FR.	E11	Wheel FR.	F 4
Fork RR.	G11	Wheel RR.	F 8
Frame body	H 6	Winker	H 3
Fuel tank	F10	Wire harness	H 5
Gearshift drum	C12		
Generator	B 8		

Ref. No.	H/C	Part No.	Description	Reqd. No. '83	Serial No. From	To	Remarks
1	1076231	11341-461-750	COVER, L. CRANKCASE	1			
2	0715656	11395-425-000	GASKET, L. SIDE COVER	1			
• 3	1328137	30220-MG5-154	ADVANCER ASSY., SPARK	1			
4	1305788	30228-MA3-000	BOSS, TIMING	1			
5	1305796	30300-MG5-000	GENERATOR ASSY., PULSE	1			
6	1305804	30371-MG5-670	COVER, POINT	1			
7	0717108	30372-425-000	GASKET, POINT COVER	1			
8	0717173	32116-425-000	PLATE, PULSER CORD SETTING	1			
9	1053057	90052-MA3-000	BOLT, FLANGE, 8X60	1			
10	0054197	92000-06012	BOLT, HEX., 6X12	1			
11	0420521	93700-06025-0B	SCREW, OVAL, 6X25	3			
12	0059071	94101-06000	WASHER, PLAIN, 6MM	2			
13	0069310	94301-08140	PIN A, DOWEL, 8X14	2			
14	0782854	96000-06014-00	BOLT, FLANGE, 6X14	2			
15	1311463	96000-06032-02	BOLT, FLANGE, 6X32	6			
16	0911974	96000-06040-02	BOLT, FLANGE, 6X40	2			

CB1100F '83 Engine No.; SC11E-2000001 To Subsequent

© HONDA MOTOR CO., LTD. 1983

B 12

Block No.
E-10

Starting motor

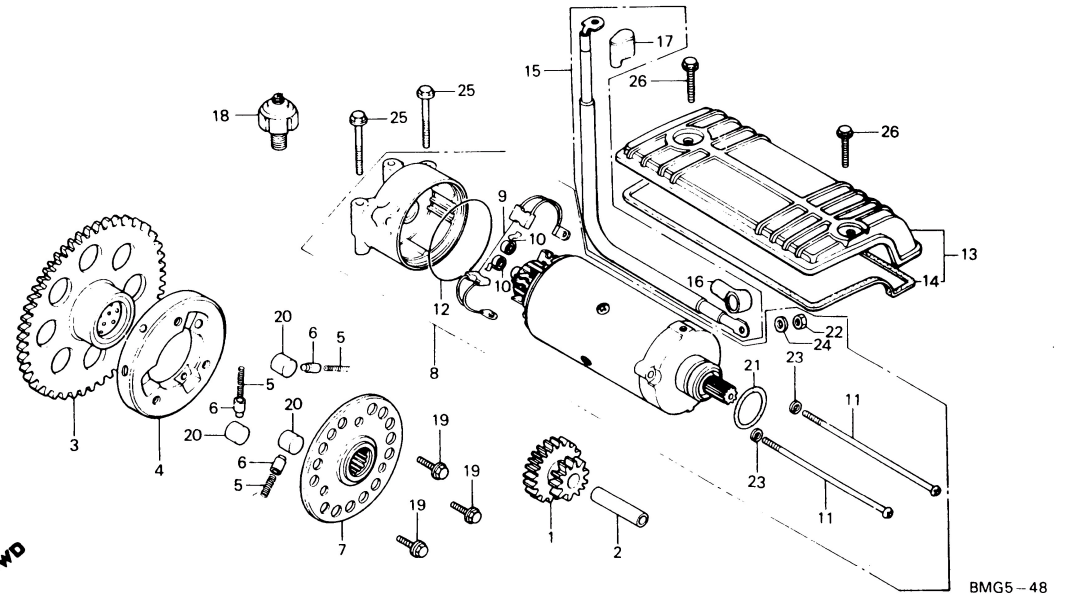

CB1100F '83

Air cleaner	G 3	Handle lever	E 4
Battery	G 2	Handle pipe	E 7
Brake caliper FR.	F 2	Handle switch	E 4
Brake caliper RR.	F 6	Headlight	E 1
Brake master cylinder FR.	E 6	Ignition coil	H 5
Brake master cylinder RR.	F 5	Meter	E 3
Brake pedal	G 7	Oil cooler	H 6
Cable	E 4	Oil filter	C 3
Cam chain	B 6	Oil pan	C 3
Cam chain tensioner	B 6	Oil pump	C 1
Camshaft	B 4	Piston	C 6
Carburetor (Assy. • Link)	D 1	Regulator	F 12
Carburetor (Component parts)	D 2	Seat	F 11
Chain case	G11	Side cover	F 12
Change pedal	G 7	Spark unit	F 12
Clutch	B10	Stand	G10
Crankcase	C 4	Starting motor	B12
Crankcase cover L.	B11	Steering stem	E 9
Crankshaft	C 6	Step	G 8
Cushion RR.	H 1	Stripe	H10
Cylinder head	B 2	Taillight	H 4
Cylinder head cover	B 1	Tools	H 9
Exhaust muffler	G 5	Top bridge	E 7
Fender FR.	E10	Transmission	C10
Fender RR.	H 2	Valve	B 4
Fork FR.	E11	Wheel FR.	F 4
Fork RR.	G11	Wheel RR.	F 8
Frame body	H 6	Winker	H 3
Fuel tank	F 10	Wire harness	H 5
Gearshift drum	C12		
Generator	B 8		

Ref. No.	H/C	Part No.	Description	Reqd. No. '83	Serial No. From	Serial No. To	Remarks
1	1305747	28101-MA3-000	GEAR, STARTER REDUCTION	1			
2	0717025	28106-425-000	SHAFT, STARTER REDUCTION GEAR	1			
3	1305754	28110-MA3-000	GEAR COMP., STARTING CLUTCH	1			
4	0717041	28120-425-000	OUTER COMP., STARTING CLUTCH	1			
5	0192708	28125-516-030	SPRING, STARTING CLUTCH ROLLER	3			
• 6	1243054	28126-415-000	CAP, STARTING CLUTCH ROLLER SPRING	3			
7	1305762	28130-MA3-000	FLANGE, STARTER DRIVE	1			
• 8	1214592	31200-438-018	MOTOR ASSY., STARTING	1			
9	0151357	31201-292-158	BRUSH SET, CARBON	1			
10	0151373	31204-292-158	SPRING, CARBON BRUSH	2			
11	0630723	31205-413-780	BOLT, STARTING MOTOR COVER	2			
12	0156323	31206-286-158	O-RING	1			
13	1051911	31280-438-670	COVER COMP., STARTING MOTOR	1			
14	0717165	31282-425-300	PACKING, STARTING MOTOR COVER	1			
• 15	0717942	32402-425-000	CABLE, STARTER MOTOR	1			
• 16	0177360	32411-253-000	COVER, STARTING MOTOR TERMINAL	1			
• 17	0717983	32416-425-000	COVER B, MAGNETIC SWITCH	1			
18	1087204	35500-MB9-004	SWITCH ASSY., OIL PRESSURE	1			
19	0717272	90022-425-000	BOLT, FLANGE, 8X16	3			
20	0192732	91101-516-000	ROLLER, 15X13	3			
21	1113422	91309-425-003	O-RING, 24.4X3.1	1			
22	0058081	94002-06000	NUT, HEX., 6MM	1			
23	0058966	94111-05000	WASHER, SPRING, 5MM	2			
24	0058974	94111-06000	WASHER, SPRING, 6MM	1			
25	0687848	95700-06060-00	BOLT, FLANGE, 6X60	2			
26	0823666	96000-06012-00	BOLT, FLANGE, 6X12	2			

CB1100F '83 Engine No.; SC11E-2000001 To Subsequent

© HONDA MOTOR CO., LTD. 1983

C 1

Block No.
E-11

Oil pump

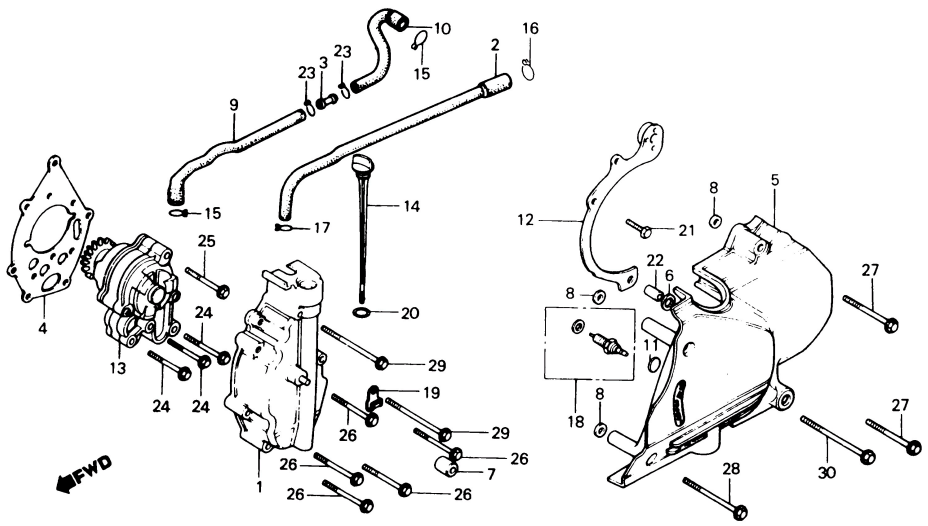

BMG5-4

CB1100F '83

Air cleaner	G 3	Handle lever	E 4
Battery	G 2	Handle pipe	E 7
Brake caliper FR.	F 2	Handle switch	E 4
Brake caliper RR.	F 6	Headlight	E 1
Brake master cylinder FR.	E 6	Ignition coil	H 5
Brake master cylinder RR.	F 5	Meter	E 3
Brake pedal	G 7	Oil cooler	H 6
Cable	E 4	Oil filter	C 3
Cam chain	B 6	Oil pan	C 3
Cam chain tensioner	B 6	Oil pump	C 1
Camshaft	B 4	Piston	C 6
Carburetor (Assy. • Link)	D 1	Regulator	F 12
Carburetor (Component parts)	D 2	Seat	F 11
Chain case	G11	Side cover	F 12
Change pedal	G 7	Spark unit	F 12
Clutch	B10	Stand	G10
Crankcase	C 4	Starting motor	B 12
Crankcase cover L.	B11	Steering stem	E 9
Crankshaft	C 6	Step	G 8
Cushion RR.	H 1	Stripe	H10
Cylinder head	B 2	Taillight	H 4
Cylinder head cover	B 1	Tools	H 9
Exhaust muffler	G 5	Top bridge	E 7
Fender FR.	E10	Transmission	C10
Fender RR.	H 2	Valve	B 4
Fork FR.	E11	Wheel FR.	F 4
Fork RR.	G11	Wheel RR.	F 8
Frame body	H 6	Winker	H 3
Fuel tank	F 10	Wire harness	H 5
Gearshift drum	C12		
Generator	B 8		

Ref. No.	H/C	Part No.	Description	Reqd. No. '83	Serial No. From	To	Remarks
1	1051341	11350-438-670	COVER COMP., OIL PUMP	1			
2	1304682	11355-MG5-670	TUBE, BREATHER (A)	1			
3	1304690	11357-MG5-670	JOINT, BREATHER TUBE	1			
4	0923565	11359-425-020	GASKET, OIL PUMP COVER	1			
5	1051358	11361-438-670	COVER, L. SIDE	1			
6	1304708	11363-MA5-000	GASKET, L. SIDE COVER (A)	1			
7	0715649	11364-425-000	RUBBER, L. SIDE COVER MOUNTING	1			
8	1304716	11365-MA5-000	GASKET B, L. SIDE COVER	3			
9	1304724	11366-MG5-670	TUBE, BREATHER (C)	1			
10	1304732	11367-MG5-670	TUBE, BREATHER (D)	1			
11	1304740	11368-MA5-000	GASKET C, L. SIDE COVER	1			
12	1051374	11615-438-670	PROTECTOR, CASE	1			
13	0926170	15100-438-003	PUMP ASSY., OIL	1			
14	0716258	15650-425-000	GAUGE, OIL LEVEL	1			
15	0574863	15771-551-000	CLIP, OIL DRAIN TUBE	2			
•16	1458652	15771-703-000	CLIP, BREATHER PIPE	1			
17	0340984	17316-611-000	CLIP, BREATHER TUBE	1			
18	0759290	35600-425-003	SWITCH ASSY., NEUTRAL	1			
19	0717181	35610-425-000	CLIP, NEUTRAL SWITCH CORD	1			
20	1216126	91307-425-003	O-RING, 22X3.0	1			
21	0054239	92000-06016	BOLT, HEX., 6X16	1			
22	0069310	94301-08140	PIN A, DOWEL, 8X14	1			
23	0323352	95002-02130	CLIP B12.5, TUBE	2			
24	0687830	95700-06045-00	BOLT, FLANGE, 6X45	3			
25	0483974	95700-06050-00	BOLT, FLANGE, 6X50	1			
•26	0799080	96000-06035-00	BOLT, FLANGE, 6X35	5			
27	0911974	96000-06040-02	BOLT, FLANGE, 6X40	2			

CB1100F '83 Engine No.; SC11E-2000001 To Subsequent

© HONDA MOTOR CO., LTD. 1983

C 2

Block No.
E-11

Oil pump

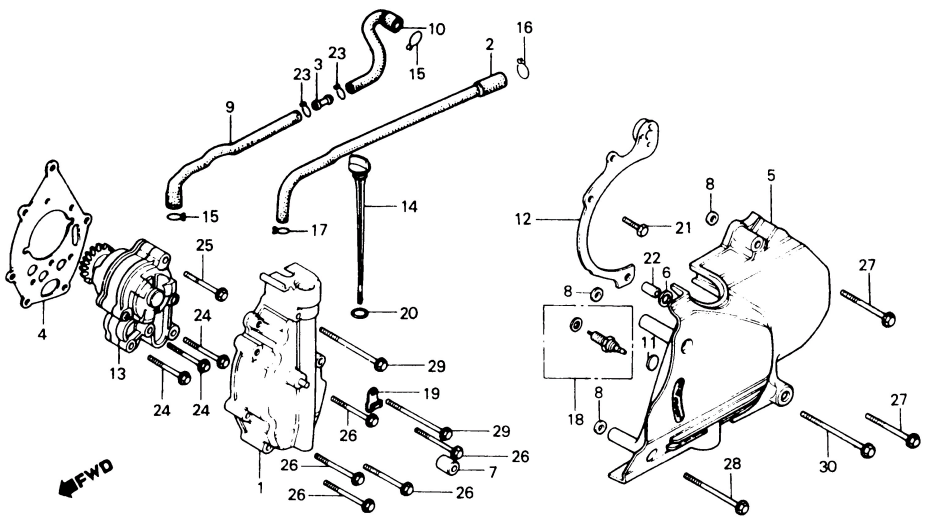

BMG5-4

CB1100F '83

Air cleaner	G 3	Handle lever	E 4
Battery	G 2	Handle pipe	E 7
Brake caliper FR.	F 2	Handle switch	E 4
Brake caliper RR.	F 6	Headlight	E 1
Brake master cylinder FR.	E 6	Ignition coil	H 5
Brake master cylinder RR.	F 5	Meter	E 3
Brake pedal	G 7	Oil cooler	H 6
Cable	E 4	Oil filter	C 3
Cam chain	B 6	Oil pan	C 3
Cam chain tensioner	B 6	Oil pump	C 1
Camshaft	B 4	Piston	C 6
Carburetor (Assy. • Link)	D 1	Regulator	F12
Carburetor (Component parts)	D 2	Seat	F11
Chain case	G11	Side cover	F12
Change pedal	G 7	Spark unit	F12
Clutch	B10	Stand	G10
Crankcase	C 4	Starting motor	B12
Crankcase cover L.	B11	Steering stem	E 9
Crankshaft	C 6	Step	G 8
Cushion RR.	H 1	Stripe	H10
Cylinder head	B 2	Taillight	H 4
Cylinder head cover	B 1	Tools	H 9
Exhaust muffler	G 5	Top bridge	E 7
Fender FR.	E10	Transmission	C10
Fender RR.	H 2	Valve	B 4
Fork FR.	E11	Wheel FR.	F 4
Fork RR.	G11	Wheel RR.	F 8
Frame body	H 6	Winker	H 3
Fuel tank	F10	Wire harness	H 5
Gearshift drum	C12		
Generator	B 8		

Ref. No.	H/C	Part No.	Description	Reqd. No. '83	Serial No. From	To	Remarks
28	0807404	96000-06055-02	BOLT, FLANGE, 6X55	1			
29	0807412	96000-06065-00	BOLT, FLANGE, 6X65	2			
30	1096809	96000-06070-02	BOLT, FLANGE, 6X70	1			

CB1100F '83 Engine No.; SC11E-2000001 To Subsequent

© HONDA MOTOR CO., LTD. 1983

C 3

Block No.
E-12

Oil filter • Oil pan

CB1100F '83

Air cleaner	G 3	Handle lever	E 4
Battery	G 2	Handle pipe	E 7
Brake caliper FR.	F 2	Handle switch	E 4
Brake caliper RR.	F 6	Headlight	E 1
Brake master cylinder FR.	E 6	Ignition coil	H 5
Brake master cylinder RR.	F 5	Meter	E 3
Brake pedal	G 7	Oil cooler	H 6
Cable	E 4	Oil filter	C 3
Cam chain	B 6	Oil pan	C 3
Cam chain tensioner	B 6	Oil pump	C 1
Camshaft	B 4	Piston	C 6
Carburetor (Assy. • Link)	D 1	Regulator	F 12
Carburetor (Component parts)	D 2	Seat	F 11
Chain case	G11	Side cover	F 12
Change pedal	G 7	Spark unit	F 12
Clutch	B10	Stand	G10
Crankcase	C 4	Starting motor	B12
Crankcase cover L.	B11	Steering stem	E 9
Crankshaft	C 6	Step	G 8
Cushion RR.	H 1	Stripe	H10
Cylinder head	B 2	Taillight	H 4
Cylinder head cover	B 1	Tools	H 9
Exhaust muffler	G 5	Top bridge	E 7
Fender FR.	E10	Transmission	C10
Fender RR.	H 2	Valve	B 4
Fork FR.	E11	Wheel FR.	F 4
Fork RR.	G11	Wheel RR.	F 8
Frame body	H 6	Winker	H 3
Fuel tank	F10	Wire harness	H 5
Gearshift drum	C12		
Generator	B 8		

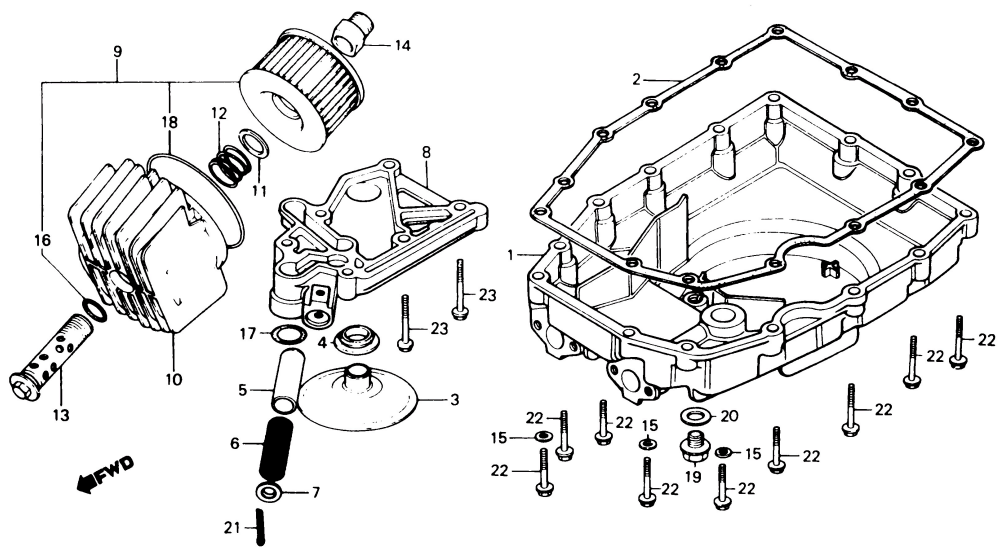

BMA3-9

Ref. No.	H/C	Part No.	Description	Reqd. No. '83	Serial No. From	To	Remarks
1	1051317	11210-438-670	PAN, OIL	1			
2	0715672	11398-425-000	GASKET, OIL PAN	1			
3	0716183	15153-425-000	STRAINER, OIL	1			
4	0716191	15154-425-000	GASKET, OIL STRAINER	1			
5	0574814	15231-634-010	VALVE, OIL PRESSURE RELIEF	1			
6	1305184	15232-MA3-000	SPRING, RELIEF VALVE	1			
7	0549923	15233-634-000	SEAT, RELIEF VALVE SPRING	1			
8	0926188	15311-438-010	BODY, OIL PATH	1			
9	1113737	15410-426-010	ELEMENT SET, OIL FILTER	1			
10	1051457	15411-438-670	CASE, OIL FILTER	1			
11	0190132	15414-300-000	SEAT, OIL FILTER SPRING	1			
12	0190140	15415-300-000	SPRING, OIL FILTER ELEMENT SETTING	1			
13	0203968	15420-300-020	BOLT, OIL FILTER CENTER	1			
14	0806893	15422-425-010	BOSS, OIL FILTER	1			
15	0163600	90441-706-000	WASHER, SEALING, 6MM	3			
16	0386995	91302-377-000	O-RING, 15X2.5	1			
17	0559419	91306-634-000	O-RING, 17X3.5MM	1			
18	1113455	91316-425-003	O-RING, 89X4.5	1			
19	0171777	92800-14000	BOLT, DRAIN PLUG, 14MM	1			
20	0171876	94109-14000	WASHER, DRAIN PLUG, 14MM	1			
21	0058438	94201-30300	PIN, SPLIT, 3.0X30	1			
22	0483933	95700-06028-00	BOLT, FLANGE, 6X28	14			
23	0484477	95700-06032-00	BOLT, FLANGE, 6X32	6			

CB1100F '83 Engine No.; SC11E-2000001 To Subsequent

© HONDA MOTOR CO., LTD. 1983

C 4

Block No.
E-13

Crankcase

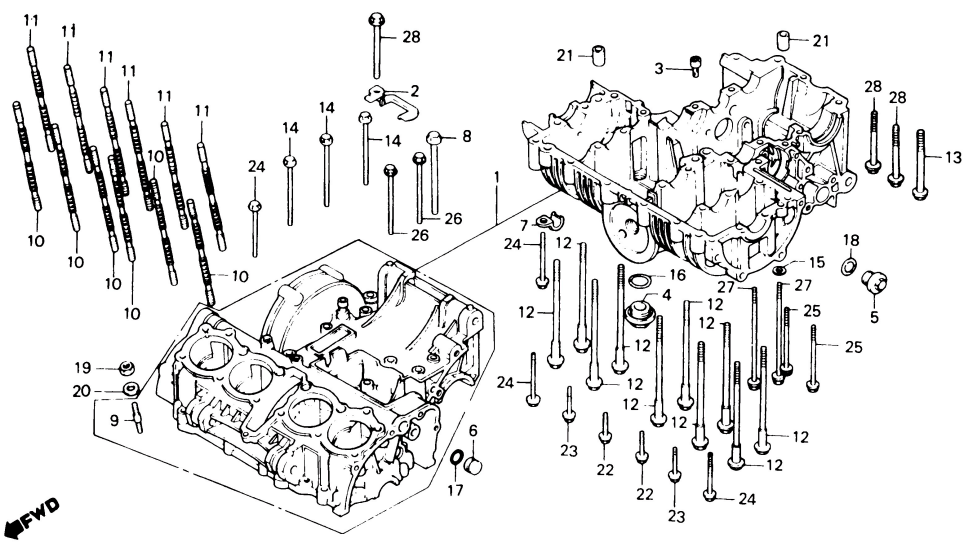

BMG5 – 5

CB1100F '83

Air cleaner	G 3	Handle lever	E 4
Battery	G 2	Handle pipe	E 7
Brake caliper FR.	F 2	Handle switch	E 4
Brake caliper RR.	F 6	Headlight	E 1
Brake master cylinder FR.	E 6	Ignition coil	H 5
Brake master cylinder RR.	F 5	Meter	E 3
Brake pedal	G 7	Oil cooler	H 6
Cable	E 4	Oil filter	C 3
Cam chain	B 6	Oil pan	C 3
Cam chain tensioner	B 6	Oil pump	C 1
Camshaft	B 4	Piston	C 6
Carburetor (Assy. • Link)	D 1	Regulator	F 12
Carburetor (Component parts)	D 2	Seat	F 11
Chain case	G 11	Side cover	F 12
Change pedal	G 7	Spark unit	F 12
Clutch	B 10	Stand	G 10
Crankcase	C 4	Starting motor	B 12
Crankcase cover L.	B 11	Steering stem	E 9
Crankshaft	C 6	Step	G 8
Cushion RR.	H 1	Stripe	H 10
Cylinder head	B 2	Taillight	H 4
Cylinder head cover	B 1	Tools	H 9
Exhaust muffler	G 5	Top bridge	E 7
Fender FR.	E 10	Transmission	C 10
Fender RR.	H 2	Valve	B 4
Fork FR.	E 11	Wheel FR.	F 4
Fork RR.	G 11	Wheel RR.	F 8
Frame body	H 6	Winker	H 3
Fuel tank	F 10	Wire harness	H 5
Gearshift drum	C 12		
Generator	B 8		

Ref. No.	H/C	Part No.	Description	Reqd. No. '83	Serial No. From	To	Remarks
1	1304666	11000-MG5-670	CRANKCASE SET	1			
2	1304757	11618-MA3-000	PLATE, TUBE GUARD	1			
3	0759233	11620-425-000	ORIFICE, OIL CONTROL	1			
4	0069625	12361-035-000	CAP, TAPPET ADJUSTING HOLE	1			
5	0193805	15331-300-000	CAP, OIL PATH	1			
6	0444638	15336-393-000	PLUG, OIL PATH	1			
• 7	0926790	32900-438-000	CLIP, CORD	1			
8	0717298	90024-425-000	BOLT, FLANGE, 8X83	1			
9	0923573	90028-425-000	BOLT, STUD, 6X34	1			
10	0926956	90031-438-003	BOLT, STUD, 10X230.5 (TOKAI)	6			
11	0926964	90032-438-003	BOLT, STUD, 10X230.5 (TOKAI)	6			
12	0446609	90042-393-000	BOLT, UBS, 8X118	10			
13	1053040	90043-438-670	BOLT, UBS, 10X72	1			
14	1310952	90055-MA3-000	BOLT, FLANGE, 7X85	3			
15	0163600	90441-706-000	WASHER, SEALING, 6MM	1			
16	0001065	91302-001-020	O-RING, 30.8MM	1			
17	0280404	91306-329-000	O-RING, 16X1.9	1			
18	1113406	91306-425-003	O-RING, 19.4X2.8	1			
19	0058016	94001-06000	NUT, HEX., 6MM	1			
20	0059071	94101-06000	WASHER, PLAIN, 6MM	1			
21	0058206	94301-10160	PIN A, DOWEL, 10X16	2			
22	0483941	95700-06035-00	BOLT, FLANGE, 6X35	2			
23	0483966	95700-06040-00	BOLT, FLANGE, 6X40	2			
24	0483974	95700-06050-00	BOLT, FLANGE, 6X50	4			
25	0698720	95700-06070-00	BOLT, FLANGE, 6X70	2			
26	0484006	95700-06080-00	BOLT, FLANGE, 6X80	2			
27	0317586	95700-06110-00	BOLT, FLANGE, 6X110	2			

CB1100F '83 Engine No.; SC11E – 2000001 To Subsequent

© HONDA MOTOR CO., LTD. 1983

C 5

Block No.
E-13

Crankcase

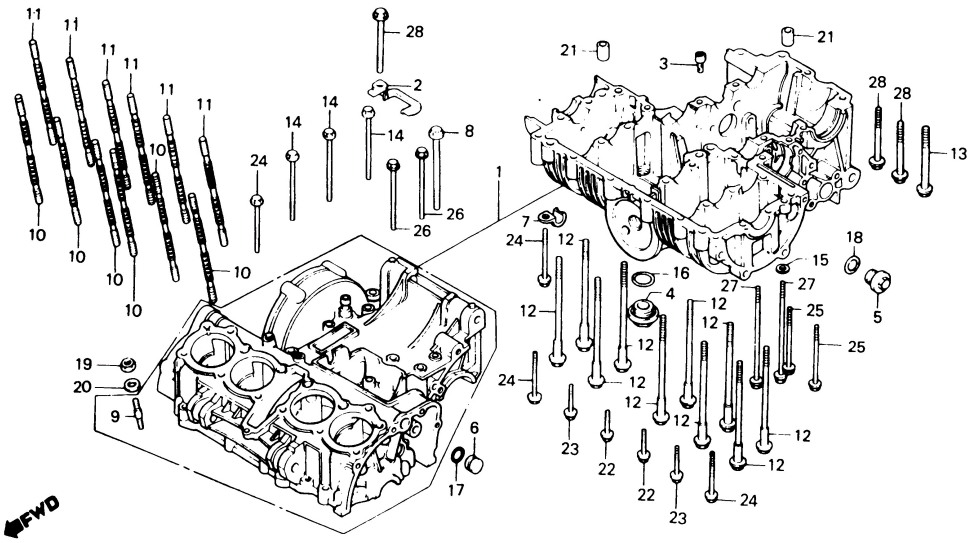

BMG5-5

CB1100F '83

Air cleaner	G 3	Handle lever	E 4
Battery	G 2	Handle pipe	E 7
Brake caliper FR.	F 2	Handle switch	E 4
Brake caliper RR.	F 6	Headlight	E 1
Brake master cylinder FR.	E 6	Ignition coil	H 5
Brake master cylinder RR.	F 5	Meter	E 3
Brake pedal	G 7	Oil cooler	H 6
Cable	E 4	Oil filter	C 3
Cam chain	B 6	Oil pan	C 3
Cam chain tensioner	B 6	Oil pump	C 1
Camshaft	B 4	Piston	C 6
Carburetor (Assy. • Link)	D 1	Regulator	F12
Carburetor (Component parts)	D 2	Seat	F11
Chain case	G11	Side cover	F12
Change pedal	G 7	Spark unit	F12
Clutch	B10	Stand	G10
Crankcase	C 4	Starting motor	B12
Crankcase cover L.	B11	Steering stem	E 9
Crankshaft	C 6	Step	G 8
Cushion RR.	H 1	Stripe	H10
Cylinder head	B 2	Taillight	H 4
Cylinder head cover	B 1	Tools	H 9
Exhaust muffler	G 5	Top bridge	E 7
Fender FR.	E10	Transmission	C10
Fender RR.	H 2	Valve	B 4
Fork FR.	E11	Wheel FR.	F 4
Fork RR.	G11	Wheel RR.	F 8
Frame body	H 6	Winker	H 3
Fuel tank	F10	Wire harness	H 5
Gearshift drum	C12		
Generator	B 8		

Ref. No.	H/C	Part No.	Description	Reqd. No. '83	Serial No. From	Serial No. To	Remarks
28	0453233	95700-08060-00	BOLT, FLANGE, 8X60	3			

CB1100F '83 Engine No.; SC11E-2000001 To Subsequent

© HONDA MOTOR CO., LTD. 1983

C 6

Block No.
E-14

Crankshaft • Piston

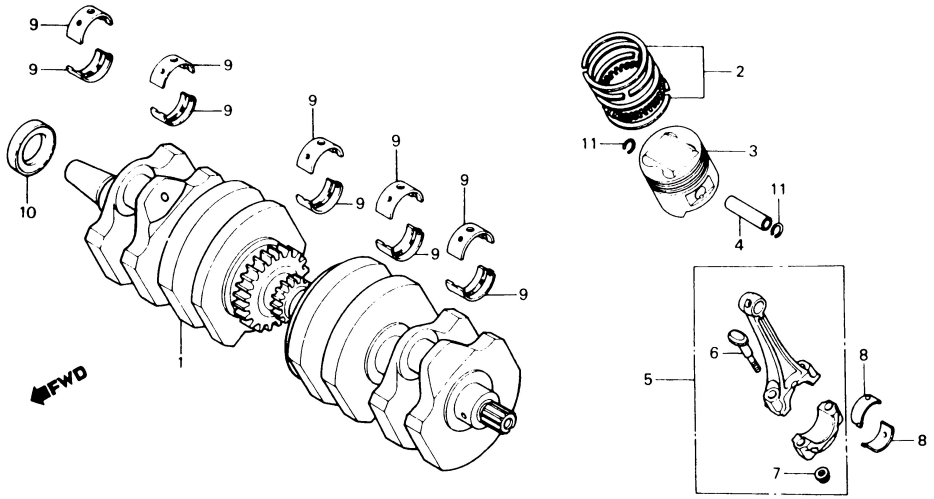

BMA3 – 11

CB1100F '83

Air cleaner	G 3	Handle lever	E 4
Battery	G 2	Handle pipe	E 7
Brake caliper FR.	F 2	Handle switch	E 4
Brake caliper RR.	F 6	Headlight	E 1
Brake master cylinder FR.	E 6	Ignition coil	H 5
Brake master cylinder RR.	F 5	Meter	E 3
Brake pedal	G 7	Oil cooler	H 6
Cable	E 4	Oil filter	C 3
Cam chain	B 6	Oil pan	C 3
Cam chain tensioner	B 6	Oil pump	C 1
Camshaft	B 4	Piston	C 6
Carburetor (Assy. • Link)	D 1	Regulator	F 12
Carburetor (Component parts)	D 2	Seat	F 11
Chain case	G11	Side cover	F 12
Change pedal	G 7	Spark unit	F 12
Clutch	B10	Stand	G10
Crankcase	C 4	Starting motor	B12
Crankcase cover L.	B11	Steering stem	E 9
Crankshaft	C 6	Step	G 8
Cushion RR.	H 1	Stripe	H10
Cylinder head	B 2	Taillight	H 4
Cylinder head cover	B 1	Tools	H 9
Exhaust muffler	G 5	Top bridge	E 7
Fender FR.	E10	Transmission	C10
Fender RR.	H 2	Valve	B 4
Fork FR.	E11	Wheel FR.	F 4
Fork RR.	G11	Wheel RR.	F 8
Frame body	H 6	Winker	H 3
Fuel tank	F10	Wire harness	H 5
Gearshift drum	C12		
Generator	B 8		

Ref. No.	H/C	Part No.	Description	Reqd. No. '83	Serial No. From	Serial No. To	Remarks
• 1	1304831	13000-MA3-000	CRANKSHAFT COMP.	1			
• 2	1372291	13011-MG5-004	RING SET, PISTON (STD.)	4			
•	1372309	13021-MG5-004	RING SET, PISTON (0.25)	(4)			
•	1372317	13031-MG5-004	RING SET, PISTON (0.50)	(4)			
•	1372325	13041-MG5-004	RING SET, PISTON (0.75)	(4)			
•	1372333	13051-MG5-004	RING SET, PISTON (1.00)	(4)			
3	1304898	13101-MG5-670	PISTON (STD)	4			
	1304906	13102-MG5-670	PISTON (0.25)	(4)			
	1304914	13103-MG5-670	PISTON (0.50)	(4)			
	1304922	13104-MG5-670	PISTON (0.75)	(4)			
	1304930	13105-MG5-670	PISTON (1.00)	(4)			
4	1304948	13111-MA3-000	PIN, PISTON	4			
5	1287853	13201-MA3-000	ROD ASSY. A, CONNECTING	4			
	1287861	13202-MA3-000	ROD ASSY. B, CONNECTING	4			
	1287879	13203-MA3-000	ROD ASSY. C, CONNECTING	4			
	1287887	13204-MA3-000	ROD ASSY. D, CONNECTING	4			
	1287895	13205-MA3-000	ROD ASSY. E, CONNECTING	4			
6	0881466	13213-463-003	BOLT, CONNECTING ROD (NAGOYA)	8			
• 7	0725424	13205-689-004	NUT, CONNECTING ROD	8			
• 8	1365113	13215-MG5-003	BEARING A, CONNECTING ROD (BLUE)	8			
•	1365121	13216-MG5-003	BEARING B, CONNECTING ROD (BLACK)	8			
•	1365139	13217-MG5-003	BEARING C, CONNECTING ROD (BROWN)	8			
•	1383199	13218-MG5-003	BEARING D, CONNECTING ROD (GREEN)	8			
•	1383207	13219-MG5-003	BEARING E, CONNECTING ROD (YELLOW)	8			
9	1305010	13315-MA3-003	BEARING A, MAIN (BLACK)	10			
	1305028	13316-MA3-003	BEARING B, MAIN (BROWN)	10			

Connecting rod bearing selection

(Oil clearance 20 ~ 45 μm)

Connecting rod I.D. 39φ \ Crank pin O.D. 36φ		1 0 −0.008	2 −0.008 −0.016	3 −0.016 −0.025
1	0 +0.008	Yellow	Green	Brown
2	+0.008 +0.016	Green	Brown	Black
3	+0.016 +0.024	Brown	Black	Blue

Crankshaft bearing selection

(Oil clearance 20 ~ 45 μm)

Crankcase I.D. 39φ \ Crankshaft O.D. 36φ		A 0 −0.008	B −0.008 −0.016	C −0.016 −0.025
A	0 +0.008	Yellow	Green	Brown
B	+0.008 +0.016	Green	Brown	Black
C	+0.016 +0.024	Brown	Black	Blue

* ( ) IN THE REQD. NO. COLUMN INDICATES AN OPTIONAL PART OR A SELECTIVE PART.

CB1100F '83 Engine No.; SC11E – 2000001 To Subsequent

© HONDA MOTOR CO., LTD. 1983

C 7

Block No.
E-14

Crankshaft • Piston

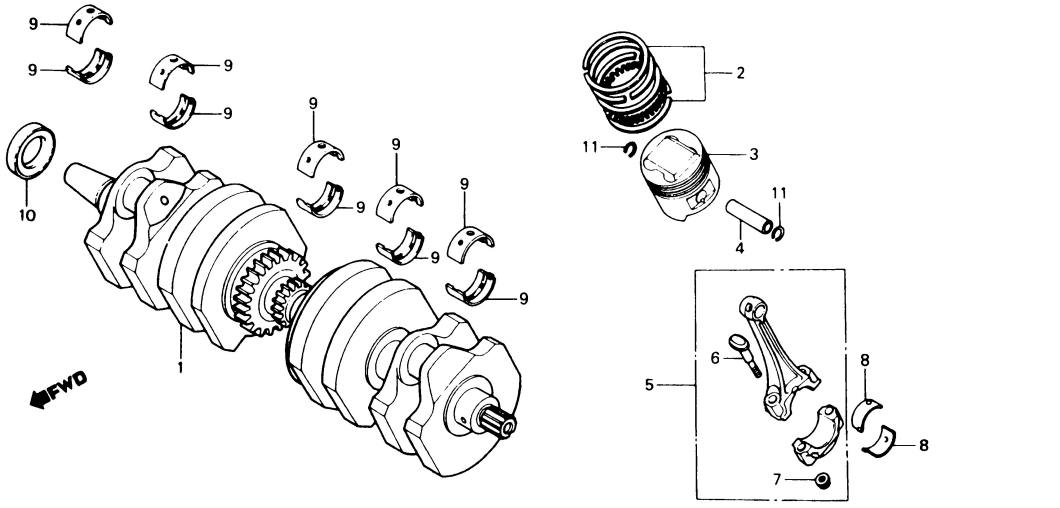

BMA3-11

CB1100F '83

Air cleaner	G 3	Handle lever	E 4
Battery	G 2	Handle pipe	E 7
Brake caliper FR.	F 2	Handle switch	E 4
Brake caliper RR.	F 6	Headlight	E 1
Brake master cylinder FR.	E 6	Ignition coil	H 5
Brake master cylinder RR.	F 5	Meter	E 3
Brake pedal	G 7	Oil cooler	H 6
Cable	E 4	Oil filter	C 3
Cam chain	B 6	Oil pan	C 3
Cam chain tensioner	B 6	Oil pump	C 1
Camshaft	B 4	Piston	C 6
Carburetor (Assy. • Link)	D 1	Regulator	F12
Carburetor (Component parts)	D 2	Seat	F11
Chain case	G11	Side cover	F12
Change pedal	G 7	Spark unit	F12
Clutch	B10	Stand	G10
Crankcase	C 4	Starting motor	B12
Crankcase cover L.	B11	Steering stem	E 9
Crankshaft	C 6	Step	G 8
Cushion RR.	H 1	Stripe	H10
Cylinder head	B 2	Taillight	H 4
Cylinder head cover	B 1	Tools	H 9
Exhaust muffler	G 5	Top bridge	E 7
Fender FR.	E10	Transmission	C10
Fender RR.	H 2	Valve	B 4
Fork FR.	E11	Wheel FR.	F 4
Fork RR.	G11	Wheel RR.	F 8
Frame body	H 6	Winker	H 3
Fuel tank	F10	Wire harness	H 5
Gearshift drum	C12		
Generator	B 8		

Ref. No.	H/C	Part No.	Description	Reqd. No. '83	Serial No. From	To	Remarks
	1305036	13317-MA3-003	BEARING C, MAIN (GREEN)	10			
	1305044	13318-MA3-003	BEARING D, MAIN (YELLOW)	10			
	1305051	13319-MA3-003	BEARING E, MAIN (BLUE)	10			
• 10	0717405	91201-425-003	OIL SEAL, 25X42X8	1			
11	0398537	94601-17000	CLIP, PISTON PIN, 17MM	8			

CB1100F '83 Engine No.; SC11E-2000001 To Subsequent

© HONDA MOTOR CO., LTD. 1983

C 8

Block No.
E-15

Primary shaft

CB1100F '83

Air cleaner	G 3	Handle lever	E 4
Battery	G 2	Handle pipe	E 7
Brake caliper FR.	F 2	Handle switch	E 4
Brake caliper RR.	F 6	Headlight	E 1
Brake master cylinder FR.	E 6	Ignition coil	H 5
Brake master cylinder RR.	F 5	Meter	E 3
Brake pedal	G 7	Oil cooler	H 6
Cable	E 4	Oil filter	C 3
Cam chain	B 6	Oil pan	C 3
Cam chain tensioner	B 6	Oil pump	C 1
Camshaft	B 4	Piston	C 6
Carburetor (Assy. • Link)	D 1	Regulator	F 12
Carburetor (Component parts)	D 2	Seat	F 11
Chain case	G11	Side cover	F 12
Change pedal	G 7	Spark unit	F 12
Clutch	B10	Stand	G10
Crankcase	C 4	Starting motor	B12
Crankcase cover L.	B11	Steering stem	E 9
Crankshaft	C 6	Step	G 8
Cushion RR.	H 1	Stripe	H10
Cylinder head	B 2	Taillight	H 4
Cylinder head cover	B 1	Tools	H 9
Exhaust muffler	G 5	Top bridge	E 7
Fender FR.	E10	Transmission	C10
Fender RR.	H 2	Valve	B 4
Fork FR.	E11	Wheel FR.	F 4
Fork RR.	G11	Wheel RR.	F 8
Frame body	H 6	Winker	H 3
Fuel tank	F10	Wire harness	H 5
Gearshift drum	C12		
Generator	B 8		

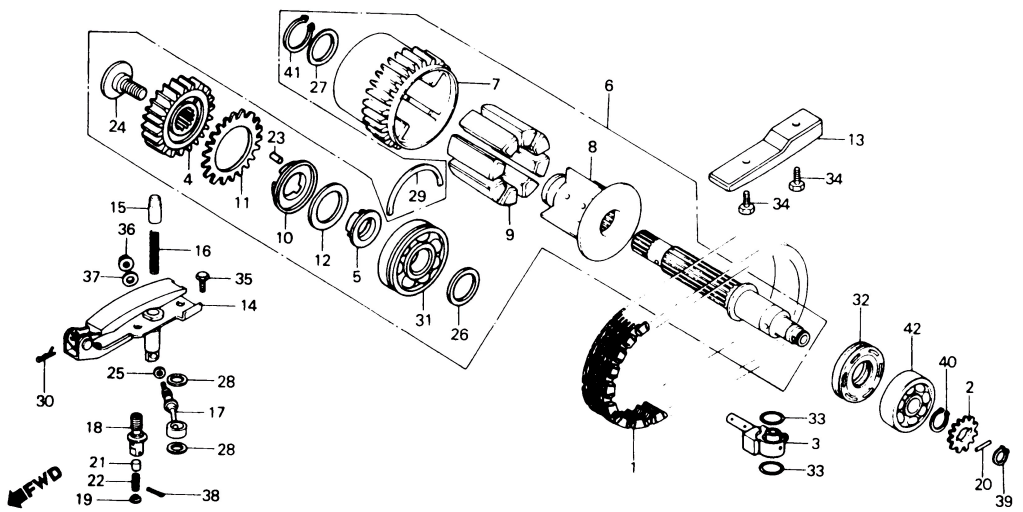

BMG5-6

Ref. No.	H/C	Part No.	Description	Reqd. No. '83	Serial No. From	To	Remarks
1	1305069	13610-MA3-003	CHAIN, PRIMARY	1			
2	0716209	15211-425-000	GEAR, OIL PUMP DRIVE (17T)	1			
3	0764449	15710-438-000	NOZZLE, CHAIN OIL FEED	1			
4	1305606	23103-MG5-670	GEAR, PRIMARY DRIVE (24T)	1			
5	1305614	23105-MG5-670	COLLAR, PRIMARY DRIVE GEAR	1			
6	1305622	23110-MG5-670	SHAFT COMP., PRIMARY	1			
7	1305630	23112-MA3-300	SPROCKET, PRIMARY (28T)	1			
8	0720474	23114-425-300	HUB, DRIVEN SPROCKET	1			
9	1305648	23115-MA3-300	RUBBER, DAMPER	8			
10	1305655	23123-MG5-670	PLATE, SIDE	1			
11	0720508	23124-425-300	SUB GEAR, PRIMARY DRIVE (23T)	1			
•12	1458660	23125-MG5-670	SPRING, DISK	1			
13	0444976	23132-393-000	GUIDE, PRIMARY CHAIN	1			
•14	1319334	23160-MA3-010	BASE COMP., PRIMARY TENSIONER	1			
15	0700732	23167-422-010	BAR ASSY., TENSIONER PUSH	1			
16	0742817	23168-425-000	SPRING, PRIMARY CHAIN TENSIONER	1			
17	0716720	23175-425-000	PIPE COMP., PRIMARY CHAIN TENSIONER	1			
18	0716738	23180-425-000	BODY COMP., TENSIONER VALVE	1			
19	0716746	23182-425-000	WASHER, STOPPER	1			
20	0235978	24444-300-000	ROLLER, 4X20.6	1			
21	0445312	27611-393-000	VALVE, TORQUE CONVERTER FLUID CHECK	1			
22	0445320	27621-393-000	SPRING, TORQUE CONVERTER FLUID VALVE	1			
23	0025064	30905-216-000	PIN, CAMSHAFT, 3X5.2	1			
24	0720904	90013-425-003	BOLT, PRIMARY SHAFT	1			

CB1100F '83 Engine No.; SC11E-2000001 To Subsequent

© HONDA MOTOR CO., LTD. 1983

C 9

Block No.
E-15

Primary shaft

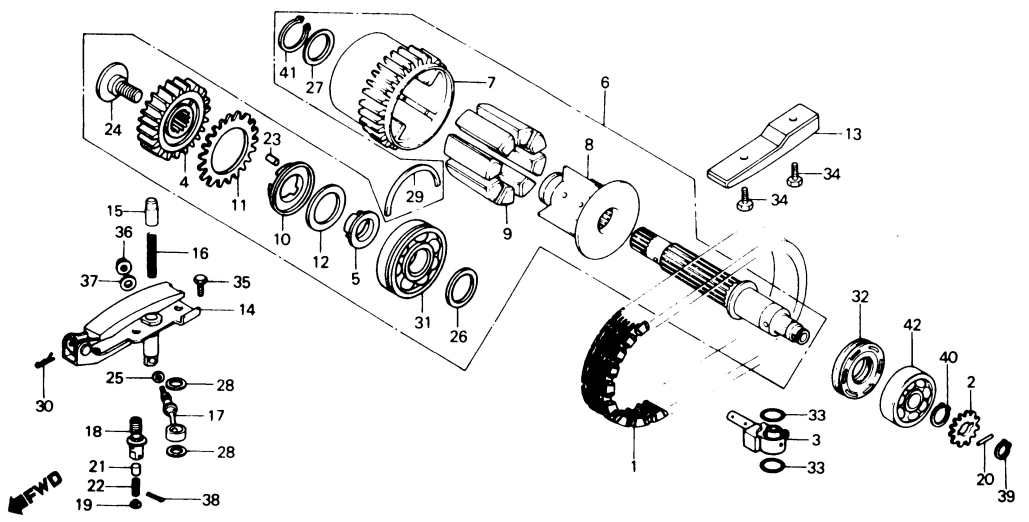

BMG5-6

CB1100F '83

Air cleaner	G 3	Handle lever	E 4
Battery	G 2	Handle pipe	E 7
Brake caliper FR.	F 2	Handle switch	E 4
Brake caliper RR.	F 6	Headlight	E 1
Brake master cylinder FR.	E 6	Ignition coil	H 5
Brake master cylinder RR.	F 5	Meter	E 3
Brake pedal	G 7	Oil cooler	H 6
Cable	E 4	Oil filter	C 3
Cam chain	B 6	Oil pan	C 3
Cam chain tensioner	B 6	Oil pump	C 1
Camshaft	B 4	Piston	C 6
Carburetor (Assy. • Link)	D 1	Regulator	F 12
Carburetor (Component parts)	D 2	Seat	F 11
Chain case	G11	Side cover	F 12
Change pedal	G 7	Spark unit	F 12
Clutch	B10	Stand	G10
Crankcase	C 4	Starting motor	B12
Crankcase cover L.	B11	Steering stem	E 9
Crankshaft	C 6	Step	G 8
Cushion RR.	H 1	Stripe	H10
Cylinder head	B 2	Taillight	H 4
Cylinder head cover	B 1	Tools	H 9
Exhaust muffler	G 5	Top bridge	E 7
Fender FR.	E10	Transmission	C10
Fender RR.	H 2	Valve	B 4
Fork FR.	E11	Wheel FR.	F 4
Fork RR.	G11	Wheel RR.	F 8
Frame body	H 6	Winker	H 3
Fuel tank	F10	Wire harness	H 5
Gearshift drum	C12		
Generator	B 8		

Ref. No.	H/C	Part No.	Description	Reqd. No. '83	Serial No. From	To	Remarks
25	0742825	90428-425-000	WASHER, 8.2MM	1			
26	0768549	90453-426-000	WASHER, THRUST, 22.5MM	1			
27	0720953	90475-425-000	WASHER, THRUST, 30MM	1			
28	0720961	90483-700-000	WASHER, 14MM	2			
29	0446757	90601-393-000	SET RING, 56MM	1			
30	0717371	90731-425-000	PIN, LOCK, 10MM	1			
31	0927079	91007-438-003	BEARING, RADIAL BALL, 63/22	1			
32	0818872	91257-425-013	OIL SEAL, 25X47X10	1			
33	0386995	91302-377-000	O-RING, 15X2.5	2			
34	0054197	92000-06012	BOLT, HEX., 6X12	2			
35	0054213	92000-06014	BOLT, HEX., 6X14	3			
36	0471623	94050-06000	NUT, FLANGE, 6MM	1			
37	0059071	94101-06000	WASHER, PLAIN, 6MM	1			
38	0278838	94201-16220	PIN, SPLIT, 1.6X22	1			
39	0169532	94510-17000	CIRCLIP, EXTERNAL, 17	1			
40	0053629	94510-20000	CIRCLIP, EXTERNAL, 20	1			
41	0171900	94510-30000	CIRCLIP, EXTERNAL, 30	1			
42	0053272	96100-62040	BEARING, RADIAL BALL, 6204	1			

CB1100F '83 Engine No.; SC11E-2000001 To Subsequent

© HONDA MOTOR CO., LTD. 1983

C 10

Block No.
E-16

Transmission

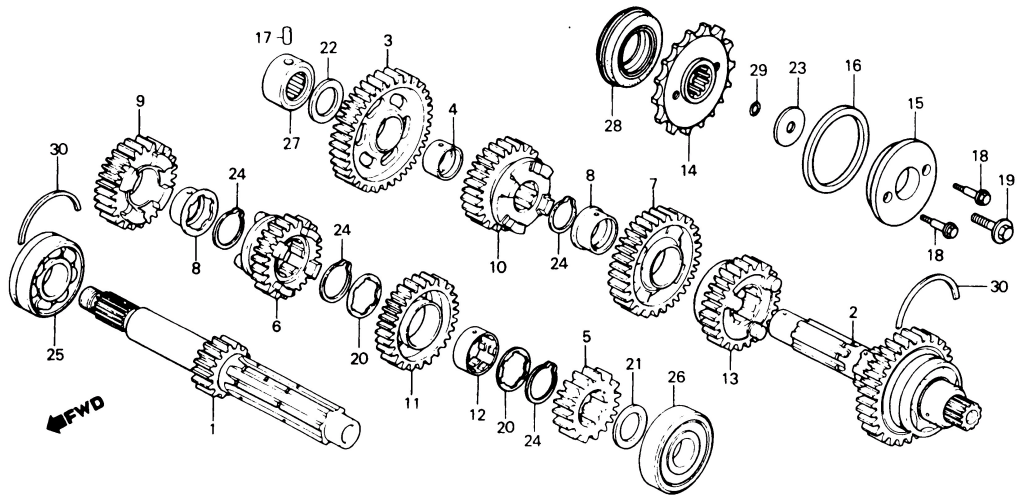

BMG5-7

CB1100F '83

Air cleaner	G 3	Handle lever	E 4
Battery	G 2	Handle pipe	E 7
Brake caliper FR.	F 2	Handle switch	E 4
Brake caliper RR.	F 6	Headlight	E 1
Brake master cylinder FR.	E 6	Ignition coil	H 5
Brake master cylinder RR.	F 5	Meter	E 3
Brake pedal	G 7	Oil cooler	H 6
Cable	E 4	Oil filter	C 3
Cam chain	B 6	Oil pan	C 3
Cam chain tensioner	B 6	Oil pump	C 1
Camshaft	B 4	Piston	C 6
Carburetor (Assy. • Link)	D 1	Regulator	F 12
Carburetor (Component parts)	D 2	Seat	F 11
Chain case	G11	Side cover	F 12
Change pedal	G 7	Spark unit	F 12
Clutch	B10	Stand	G10
Crankcase	C 4	Starting motor	B12
Crankcase cover L.	B11	Steering stem	E 9
Crankshaft	C 6	Step	G 8
Cushion RR.	H 1	Stripe	H10
Cylinder head	B 2	Taillight	H 4
Cylinder head cover	B 1	Tools	H 9
Exhaust muffler	G 5	Top bridge	E 7
Fender FR.	E10	Transmission	C10
Fender RR.	H 2	Valve	B 4
Fork FR.	E11	Wheel FR.	F 4
Fork RR.	G11	Wheel RR.	F 8
Frame body	H 6	Winker	H 3
Fuel tank	F10	Wire harness	H 5
Gearshift drum	C12		
Generator	B 8		

Ref. No.	H/C	Part No.	Description	Reqd. No. '83	Serial No. From	Serial No. To	Remarks
1	1305671	23211-MG5-670	MAINSHAFT, TRANSMISSION (15T)	1			
2	1305689	23220-MA3-000	COUNTERSHAFT, TRANSMISSION (34T)	1			
3	0716779	23411-425-000	GEAR, COUNTERSHAFT LOW (38T)	1			
4	0716787	23422-425-000	BUSH, COUNTERSHAFT LOW GEAR	1			
• 5	1458678	23431-MG5-670	GEAR, MAINSHAFT SECOND (19T)	1			
6	1305697	23451-MG5-670	GEAR, MAINSHAFT THIRD (23T)	1			
7	1305705	23461-MA3-000	GEAR, COUNTERSHAFT THIRD (32T)	1			
8	1305713	23465-MA3-000	BUSH, 31MM	2			
9	1288406	23471-MA3-000	GEAR, MAINSHAFT FOURTH (25T)	1			
10	1305721	23481-MA3-000	GEAR, COUNTERSHAFT FOURTH (29T)	1			
• 11	1458686	23491-MG5-670	GEAR, MAINSHAFT FIFTH (27T)	1			
12	0691220	23495-422-000	COLLAR, SPLINE, 28X17	1			
13	1305739	23501-MG5-670	GEAR, COUNTERSHAFT FIFTH (27T)	1			
14	1051838	23801-438-000	SPROCKET, DRIVE (17T)	1			
15	1051846	23820-438-003	GUIDE, RING	1			
16	1051853	23821-460-000	RING, DAMPER	1			
17	0075911	24261-283-000	PIN, GEARSHIFT FORK GUIDE	1			
18	0766493	90020-438-000	BOLT, FLANGE, 6X20	2			
19	1053032	90037-422-003	BOLT, SPECIAL, 10MM	1			
20	0691253	90451-422-000	WASHER, THRUST, 28MM	2			
21	0768549	90453-426-000	WASHER, THRUST, 22.5MM	1			
22	0724310	90457-425-000	WASHER, THRUST, 22MM	1			
23	0814046	90459-438-000	WASHER, 10.2MM	1			
24	0691303	90601-422-000	CIRCLIP, 28MM	4			
25	1311216	91004-MG5-671	BEARING, RADIAL BALL, 6305	1			

CB1100F '83 Engine No.; SC11E-2000001 To Subsequent

© HONDA MOTOR CO., LTD. 1983

C 11

Block No.
E-16

Transmission

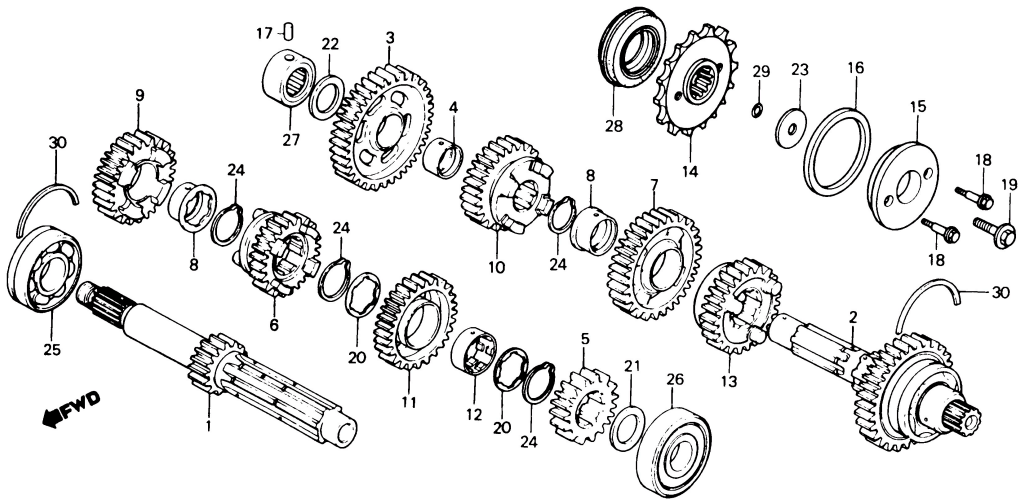

BMG5-7

CB1100F '83

Air cleaner	G 3	Handle lever	E 4
Battery	G 2	Handle pipe	E 7
Brake caliper FR.	F 2	Handle switch	E 4
Brake caliper RR.	F 6	Headlight	E 1
Brake master cylinder FR.	E 6	Ignition coil	H 5
Brake master cylinder RR.	F 5	Meter	E 3
Brake pedal	G 7	Oil cooler	H 6
Cable	E 4	Oil filter	C 3
Cam chain	B 6	Oil pan	C 3
Cam chain tensioner	B 6	Oil pump	C 1
Camshaft	B 4	Piston	C 6
Carburetor (Assy. • Link)	D 1	Regulator	F12
Carburetor (Component parts)	D 2	Seat	F11
Chain case	G11	Side cover	F12
Change pedal	G 7	Spark unit	F12
Clutch	B10	Stand	G10
Crankcase	C 4	Starting motor	B12
Crankcase cover L.	B11	Steering stem	E 9
Crankshaft	C 6	Step	G 8
Cushion RR.	H 1	Stripe	H10
Cylinder head	B 2	Taillight	H 4
Cylinder head cover	B 1	Tools	H 9
Exhaust muffler	G 5	Top bridge	E 7
Fender FR.	E10	Transmission	C10
Fender RR.	H 2	Valve	B 4
Fork FR.	E11	Wheel FR.	F 4
Fork RR.	G11	Wheel RR.	F 8
Frame body	H 6	Winker	H 3
Fuel tank	F10	Wire harness	H 5
Gearshift drum	C12		
Generator	B 8		

Ref. No.	H/C	Part No.	Description	Reqd. No. '83	Serial No. From	To	Remarks
26	0717389	91005-425-003	BEARING, RADIAL BALL, 63/22U	1			
27	0823724	91022-438-008	BEARING, NEEDLE, 22MM	1			
28	0796888	91205-425-003	OIL SEAL, 40X62X13	1			
29	1216142	91352-425-003	O-RING, 9.8X2.4	1			
30	0687822	95015-26200	SET RING, 620	2			

CB1100F '83 Engine No.; SC11E-2000001 To Subsequent

© HONDA MOTOR CO., LTD. 1983

C 12

Block No.
E-17

Gearshift drum

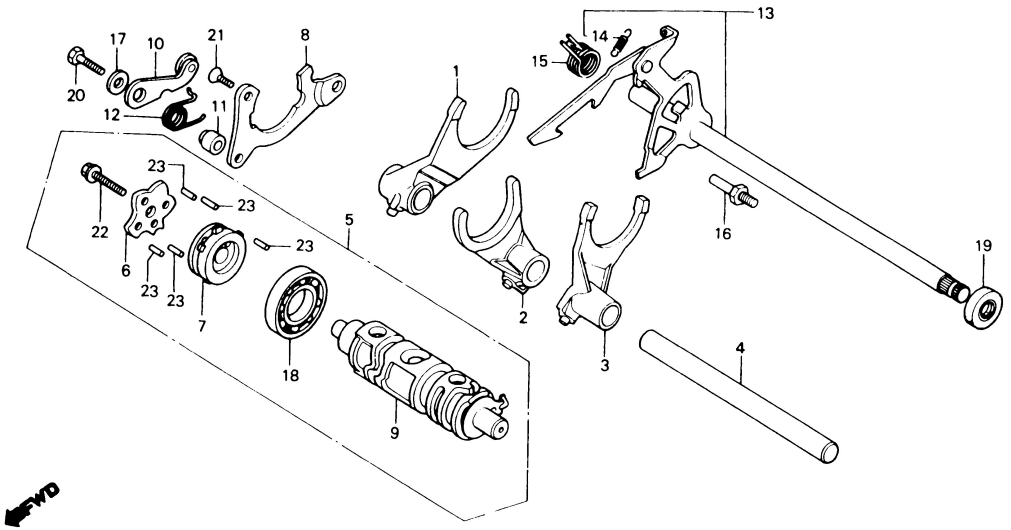

BMA3 – 14

CB1100F '83

Air cleaner	G 3	Handle lever	E 4
Battery	G 2	Handle pipe	E 7
Brake caliper FR.	F 2	Handle switch	E 4
Brake caliper RR.	F 6	Headlight	E 1
Brake master cylinder FR.	E 6	Ignition coil	H 5
Brake master cylinder RR.	F 5	Meter	E 3
Brake pedal	G 7	Oil cooler	H 6
Cable	E 4	Oil filter	C 3
Cam chain	B 6	Oil pan	C 3
Cam chain tensioner	B 6	Oil pump	C 1
Camshaft	B 4	Piston	C 6
Carburetor (Assy. • Link)	D 1	Regulator	F 12
Carburetor (Component parts)	D 2	Seat	F 11
Chain case	G11	Side cover	F 12
Change pedal	G 7	Spark unit	F 12
Clutch	B10	Stand	G10
Crankcase	C 4	Starting motor	B12
Crankcase cover L.	B11	Steering stem	E 9
Crankshaft	C 6	Step	G 8
Cushion RR.	H 1	Stripe	H10
Cylinder head	B 2	Taillight	H 4
Cylinder head cover	B 1	Tools	H 9
Exhaust muffler	G 5	Top bridge	E 7
Fender FR.	E10	Transmission	C10
Fender RR.	H 2	Valve	B 4
Fork FR.	E11	Wheel FR.	F 4
Fork RR.	G11	Wheel RR.	F 8
Frame body	H 6	Winker	H 3
Fuel tank	F10	Wire harness	H 5
Gearshift drum	C12		
Generator	B 8		

Ref. No.	H/C	Part No.	Description	Reqd. No. '83	Serial No. From	To	Remarks
1	0923672	24211-425-010	FORK COMP., R. GEARSHIFT	1			
2	1288430	24221-MG1-670	FORK COMP., CENTER GEARSHIFT	1			
3	1288448	24231-MG1-670	FORK, L. GEARSHIFT	1			
4	0716910	24261-425-000	SHAFT, GEARSHIFT FORK	1			
5	0923698	24300-425-030	DRUM ASSY., GEARSHIFT	1			
6	0898536	24303-425-310	PLATE, GEARSHIFT DRUM CAM	1			
7	0955708	24304-425-300	CENTER, GEARSHIFT DRUM	1			
8	0716969	24307-425-000	PLATE, GEARSHIFT DRUM SETTING	1			
9	1020106	24310-425-000	DRUM COMP., GEARSHIFT	1			
10	0494328	24430-413-000	STOPPER COMP., GEARSHIFT DRUM	1			
11	0926675	24432-425-000	COLLAR, GEARSHIFT DRUM STOPPER	1			
12	0716977	24435-425-000	SPRING, SHIFT DRUM STOPPER	1			
•13	1288463	24610-425-010	SPINDLE COMP., GEARSHIFT	1			
14	0716993	24641-425-000	SPRING, GEARSHIFT ARM	1			
15	0717009	24651-425-000	SPRING, GEARSHIFT RETURN	1			
16	0014357	24652-028-000	PIN, SHIFT RETURN SPRING	1			
17	0179234	90486-028-000	WASHER, SPARK ADVANCER SETTING	1			
18	0362855	91008-374-003	BEARING, BALL, 16005 (TOYO)	1			
19	1067024	91204-425-003	OIL SEAL, 12.5X25X8	1			
20	0300483	92200-06028	BOLT, HEX., 6X28	1			
21	0055780	93600-06014	SCREW, FLAT, 6X14	1			
22	0671255	95725-06025-00	BOLT, FLANGE, 6X25	1			
23	0298109	96220-40118	ROLLER, 4X11.8	5			

CB1100F '83 Engine No.; SC11E – 2000001 To Subsequent

© HONDA MOTOR CO., LTD. 1983

D 1

Block No.
E-18

Carburetor (Assy. • Link)

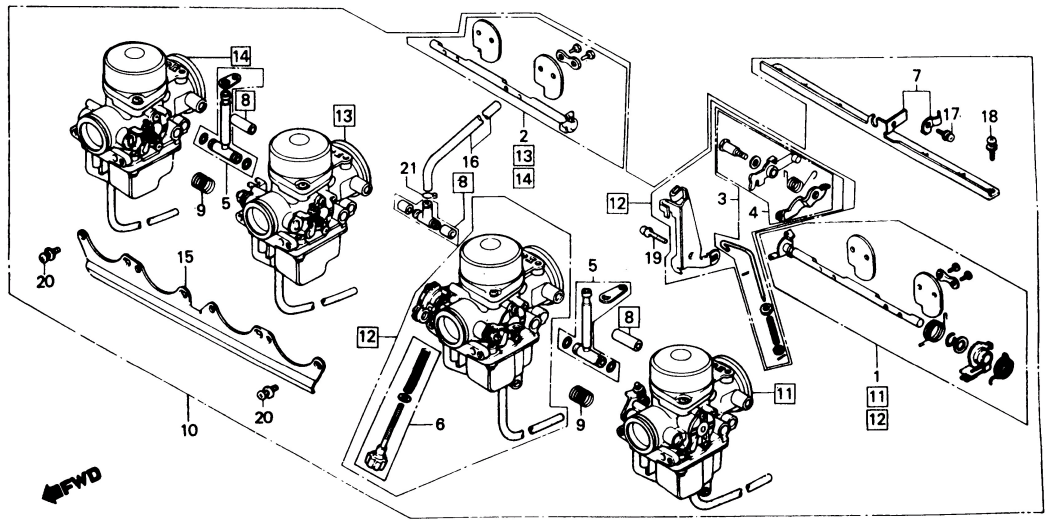

BMG5—34

CB1100F '83

Air cleaner	G 3	Handle lever	E 4
Battery	G 2	Handle pipe	E 7
Brake caliper FR.	F 2	Handle switch	E 4
Brake caliper RR.	F 6	Headlight	E 1
Brake master cylinder FR.	E 6	Ignition coil	H 5
Brake master cylinder RR.	F 5	Meter	E 3
Brake pedal	G 7	Oil cooler	H 6
Cable	E 4	Oil filter	C 3
Cam chain	B 6	Oil pan	C 3
Cam chain tensioner	B 6	Oil pump	C 1
Camshaft	B 4	Piston	C 6
Carburetor (Assy. • Link)	D 1	Regulator	F 12
Carburetor (Component parts)	D 2	Seat	F 11
Chain case	G11	Side cover	F 12
Change pedal	G 7	Spark unit	F 12
Clutch	B10	Stand	G10
Crankcase	C 4	Starting motor	B12
Crankcase cover L.	B11	Steering stem	E 9
Crankshaft	C 6	Step	G 8
Cushion RR.	H 1	Stripe	H10
Cylinder head	B 2	Taillight	H 4
Cylinder head cover	B 1	Tools	H 9
Exhaust muffler	G 5	Top bridge	E 7
Fender FR.	E10	Transmission	C10
Fender RR.	H 2	Valve	B 4
Fork FR.	E11	Wheel FR.	F 4
Fork RR.	G11	Wheel RR.	F 8
Frame body	H 6	Winker	H 3
Fuel tank	F10	Wire harness	H 5
Gearshift drum	C12		
Generator	B 8		

Ref. No.	H/C	Part No.	Description	Reqd. No. '83	Serial No. From	To	Remarks
1	1051481	16017-438-405	LINK SET A, CHOKE	1			
2	1051499	16018-438-405	LINK SET B, CHOKE	1			
3	1305234	16019-443-851	ROD SET, PUMP	1			
4	1305242	16020-MG5-671	ARM SET, LINK	1			
5	1051523	16027-438-671	JOINT SET A, FUEL	2			
6	0716340	16028-425-671	SCREW SET B	1			
7	0716381	16035-425-671	PLATE SET, RR. STAY	1			
[8]	0716399	16036-425-671	JOINT SET, THREE WAY	1			
9	0630962	16051-413-004	SPRING, COMPRESSION COIL	2			
10	1305259	16100-MG5-671	CARBURETOR ASSY.	1			
[11]	1305267	16101-MG5-305	CARBURETOR ASSY. 1	1			
[12]	1305275	16102-MG5-305	CARBURETOR ASSY. 2	1			
[13]	1305283	16103-MG5-305	CARBURETOR ASSY. 3	1			
[14]	1305291	16104-MG5-305	CARBURETOR ASSY. 4	1			
15	0830737	16119-425-672	PLATE, STAY	1			
16	0716506	16199-425-671	TUBE, FUEL	1			
17	0485946	93892-04012-00	SCREW-WASHER, 4X12	1			
18	0691808	93892-05012-00	SCREW-WASHER, 5X12	8			
19	0691816	93892-05016-00	SCREW-WASHER, 5X16	1			
20	0691824	93892-06014-00	SCREW-WASHER, 6X14	8			
21	0250647	95002-02080	CLIP B8, TUBE	1			

CB1100F '83 Engine No.; SC11E—2000001 To Subsequent

CB1100F '83 Carburetor No.; VB56A [A] To Subsequent

© HONDA MOTOR CO., LTD. 1983

* PARTS OF WHICH THE REF. NO. IS FRAMED "□" ARE AVAILABLE AS A SET.

D 2

Block No.
E-18-1

Carburetor
(Component parts)

CB1100F '83

Air cleaner	G 3	Handle lever	E 4
Battery	G 2	Handle pipe	E 7
Brake caliper FR.	F 2	Handle switch	E 4
Brake caliper RR.	F 6	Headlight	E 1
Brake master cylinder FR.	E 6	Ignition coil	H 5
Brake master cylinder RR.	F 5	Meter	E 3
Brake pedal	G 7	Oil cooler	H 6
Cable	E 4	Oil filter	C 3
Cam chain	B 6	Oil pan	C 3
Cam chain tensioner	B 6	Oil pump	C 1
Camshaft	B 4	Piston	C 6
Carburetor (Assy. • Link)	D 1	Regulator	F 12
Carburetor (Component parts)	D 2	Seat	F 11
Chain case	G 11	Side cover	F 12
Change pedal	G 7	Spark unit	F 12
Clutch	B 10	Stand	G 10
Crankcase	C 4	Starting motor	B 12
Crankcase cover L.	B 11	Steering stem	E 9
Crankshaft	C 6	Step	G 8
Cushion RR.	H 1	Stripe	H 10
Cylinder head	B 2	Taillight	H 4
Cylinder head cover	B 1	Tools	H 9
Exhaust muffler	G 5	Top bridge	E 7
Fender FR.	E 10	Transmission	C 10
Fender RR.	H 2	Valve	B 4
Fork FR.	E 11	Wheel FR.	F 4
Fork RR.	G 11	Wheel RR.	F 8
Frame body	H 6	Winker	H 3
Fuel tank	F 10	Wire harness	H 5
Gearshift drum	C 12		
Generator	B 8		

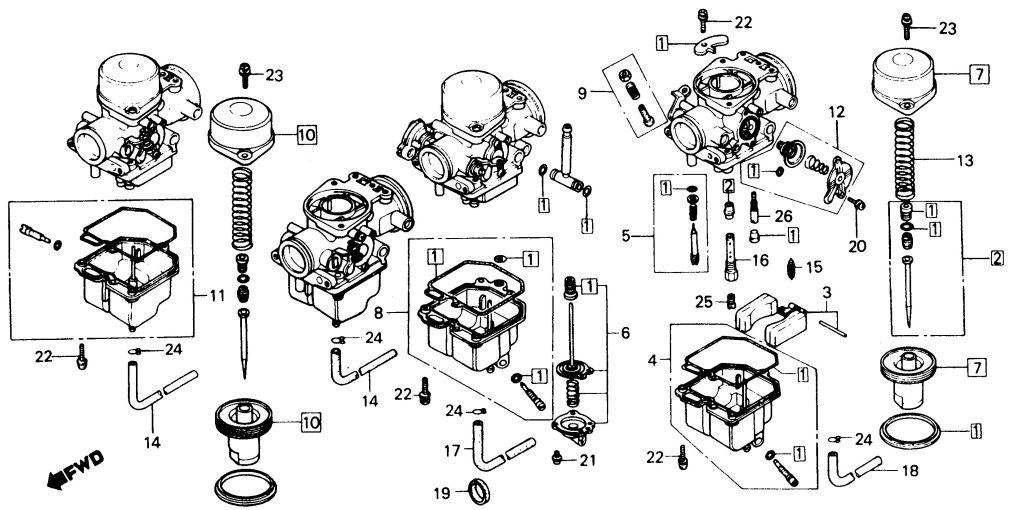

BMG5-35

Ref. No.	H/C	Part No.	Description	Reqd. No. '83	Serial No. From	Serial No. To	Remarks
[1]	1305218	16010-MG5-671	PACKING SET	4			
[2]	1305226	16012-MG5-671	NEEDLE SET, JET	4			
3	0815654	16013-413-751	FLOAT SET	4			
4	0630897	16015-413-004	CHAMBER SET, FLOAT	1			
5	0815662	16016-413-751	SCREW SET A	4			
6	1288042	16021-MG1-671	DIAPHRAGM SET, PUMP	1			
[7]	0815696	16022-413-891	PISTON SET, VACUUM	2			
8	0716324	16023-425-671	CHAMBER SET B, FLOAT	1			
9	0630939	16029-413-004	SCREW SET C	3			
[10]	0830745	16044-425-771	PISTON SET, VACUUM	2			
11	0716415	16045-425-671	CHAMBER SET C, FLOAT	2			
12	1219211	16048-KB7-004	VALVE SET, AIR CUT	4			
13	0668491	16050-415-003	SPRING, VACUUM PISTON	4			
14	0826982	16144-413-751	TUBE, OVER FLOW	2			
15	0826990	16155-413-751	VALVE COMP., FLOAT	4			
16	0926394	16165-438-003	HOLDER, NEEDLE JET	4			
17	0830414	16195-449-771	TUBE, FUEL	1			
18	0823815	16198-425-671	TUBE, FUEL	1			
19	0753756	16291-300-300	BAND, RUBBER	1			
20	0962985	93892-04010-00	SCREW-WASHER, 4X10	8			
21	0485946	93892-04012-00	SCREW-WASHER, 4X12	3			
22	0692053	93892-04016-00	SCREW-WASHER, 4X16	16			
23	0691816	93892-05016-00	SCREW-WASHER, 5X16	8			
24	0315705	95002-02650	CLIP B6.5, TUBE	4			
•25	1395755	99102-393-1220	JET, MAIN, #122	4			
26	1311554	99103-MA4-0380	JET, SLOW, #38	4			

CB1100F '83 Engine No.; SC11E-2000001 To Subsequent

CB1100F '83 Carburetor No.; VB56A [A] To Subsequent

• PARTS OF WHICH THE REF. NO. IS FRAMED "□" ARE AVAILABLE AS A SET.

© HONDA MOTOR CO., LTD. 1983

D 3

Block No.
E-19

Automatic fuel cock

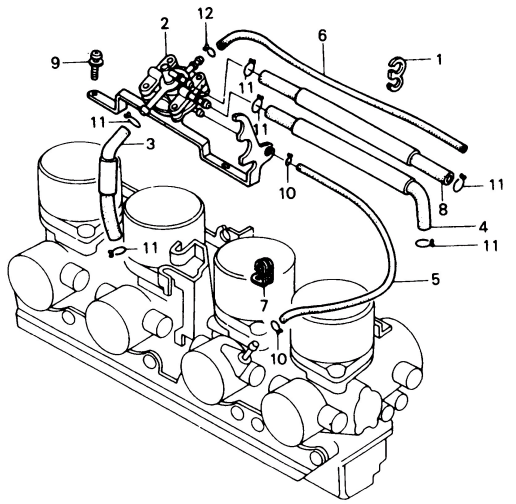

BMG1 – 18

CB1100F '83

Air cleaner	G 3	Handle lever	E 4
Battery	G 2	Handle pipe	E 7
Brake caliper FR.	F 2	Handle switch	E 4
Brake caliper RR.	F 6	Headlight	E 1
Brake master cylinder FR.	E 6	Ignition coil	H 5
Brake master cylinder RR.	F 5	Meter	E 3
Brake pedal	G 7	Oil cooler	H 6
Cable	E 4	Oil filter	C 3
Cam chain	B 6	Oil pan	C 3
Cam chain tensioner	B 6	Oil pump	C 1
Camshaft	B 4	Piston	C 6
Carburetor (Assy. • Link)	D 1	Regulator	F12
Carburetor (Component parts)	D 2	Seat	F11
Chain case	G11	Side cover	F12
Change pedal	G 7	Spark unit	F12
Clutch	B10	Stand	G10
Crankcase	C 4	Starting motor	B12
Crankcase cover L.	B11	Steering stem	E 9
Crankshaft	C 6	Step	G 8
Cushion RR.	H 1	Stripe	H10
Cylinder head	B 2	Taillight	H 4
Cylinder head cover	B 1	Tools	H 9
Exhaust muffler	G 5	Top bridge	E 7
Fender FR.	E10	Transmission	C10
Fender RR.	H 2	Valve	B 4
Fork FR.	E11	Wheel FR.	F 4
Fork RR.	G11	Wheel RR.	F 8
Frame body	H 6	Winker	H 3
Fuel tank	F10	Wire harness	H 5
Gearshift drum	C12		
Generator	B 8		

Ref. No.	H/C	Part No.	Description	Reqd. No. '83	Serial No. From	Serial No. To	Remarks
1	0908384	16876-671-650	CLAMP A, TUBE	1			
2	1288125	16970-MG1-671	COCK ASSY., AUTOMATIC FUEL	1			
3	1288133	16971-MG1-671	TUBE, FUEL	1			
4	0952564	16971-461-771	TUBE, FUEL, 7.3X200	1			
5	0952572	16972-461-771	TUBE, VACUUM, 3.5X300	1			
6	0952580	16973-461-771	TUBE, AIR VENT, 3X360	1			
7	0952598	16974-461-771	CLAMPER, TUBE	1			
8	1079284	16990-461-750	TUBE COMP., FUEL, 7.3X225	1			
9	0691816	93892-05016-00	SCREW-WASHER, 5X16	2			
10	0250639	95002-02070	CLIP B7, TUBE	2			
11	0335034	95002-02120	CLIP B12, TUBE	6			
12	0315705	95002-02650	CLIP B6.5, TUBE	1			

CB1100F '83 Engine No.; SC11E – 2000001 To Subsequent

© HONDA MOTOR CO., LTD. 1983

D 4

Block No.
EOP-1

Gasket kit A

CB1100F '83

Air cleaner	G 3	Handle lever	E 4
Battery	G 2	Handle pipe	E 7
Brake caliper FR.	F 2	Handle switch	E 4
Brake caliper RR.	F 6	Headlight	E 1
Brake master cylinder FR.	E 6	Ignition coil	H 5
Brake master cylinder RR.	F 5	Meter	E 3
Brake pedal	G 7	Oil cooler	H 6
Cable	E 4	Oil filter	C 3
Cam chain	B 6	Oil pan	C 3
Cam chain tensioner	B 6	Oil pump	C 1
Camshaft	B 4	Piston	C 6
Carburetor (Assy. • Link)	D 1	Regulator	F 12
Carburetor (Component parts)	D 2	Seat	F 11
Chain case	G 11	Side cover	F 12
Change pedal	G 7	Spark unit	F 12
Clutch	B 10	Stand	G 10
Crankcase	C 4	Starting motor	B 12
Crankcase cover L.	B 11	Steering stem	E 9
Crankshaft	C 6	Step	G 8
Cushion RR.	H 1	Stripe	H 10
Cylinder head	B 2	Taillight	H 4
Cylinder head cover	B 1	Tools	H 9
Exhaust muffler	G 5	Top bridge	E 7
Fender FR.	E 10	Transmission	C 10
Fender RR.	H 2	Valve	B 4
Fork FR.	E 11	Wheel FR.	F 4
Fork RR.	G 11	Wheel RR.	F 8
Frame body	H 6	Winker	H 3
Fuel tank	F 10	Wire harness	H 5
Gearshift drum	C 12		
Generator	B 8		

Ref. No.	H/C	Part No.	Description	Reqd. No. '83	Serial No. From	To	Remarks
1	1304641	061A1-MG5-000	GASKET KIT A (COMPONENT PARTS)	1			
	1304807	12191-MG5-670	GASKET, CYLINDER	1			
2	0688887	12209-422-005	SEAL, VALVE STEM	16			
3	1304823	12251-MG5-670	GASKET, CYLINDER HEAD	1			
4	1049113	12391-425-010	GASKET, CYLINDER HEAD COVER	1			
5	0042788	18291-254-000	GASKET, EX. PIPE	4			
6	0153296	91304-287-000	O-RING, 69.8X2.0	4			
7	0717439	91311-425-000	O-RING, CAMSHAFT HOLDER	1			
8	0446922	91313-393-003	O-RING, 7.8X2.2	1			

CB1100F '83 Engine No.; SC11E–2000001 To Subsequent

© HONDA MOTOR CO., LTD. 1983

D 5

Block No.
EOP-2

Gasket kit B

CB1100F '83

Air cleaner	G 3	Handle lever	E 4
Battery	G 2	Handle pipe	E 7
Brake caliper FR.	F 2	Handle switch	E 4
Brake caliper RR.	F 6	Headlight	E 1
Brake master cylinder FR.	E 6	Ignition coil	H 5
Brake master cylinder RR.	F 5	Meter	E 3
Brake pedal	G 7	Oil cooler	H 6
Cable	E 4	Oil filter	C 3
Cam chain	B 6	Oil pan	C 3
Cam chain tensioner	B 6	Oil pump	C 1
Camshaft	B 4	Piston	C 6
Carburetor (Assy. • Link)	D 1	Regulator	F 12
Carburetor (Component parts)	D 2	Seat	F 11
Chain case	G11	Side cover	F 12
Change pedal	G 7	Spark unit	F 12
Clutch	B10	Stand	G10
Crankcase	C 4	Starting motor	B12
Crankcase cover L.	B11	Steering stem	E 9
Crankshaft	C 6	Step	G 8
Cushion RR.	H 1	Stripe	H10
Cylinder head	B 2	Taillight	H 4
Cylinder head cover	B 1	Tools	H 9
Exhaust muffler	G 5	Top bridge	E 7
Fender FR.	E10	Transmission	C10
Fender RR.	H 2	Valve	B 4
Fork FR.	E11	Wheel FR.	F 4
Fork RR.	G11	Wheel RR.	F 8
Frame body	H 6	Winker	H 3
Fuel tank	F10	Wire harness	H 5
Gearshift drum	C12		
Generator	B 8		

Ref. No.	H/C	Part No.	Description	Reqd. No. '83	Serial No. From	To	Remarks
• 1	1319011	061B1-MG5-000	GASKET KIT B (COMPONENT PARTS)	1			
	0923565	11359-425-020	GASKET, OIL PUMP COVER	1			
2	0715656	11395-425-000	GASKET, L. SIDE COVER	1			
3	0715664	11396-425-000	GASKET, CLUTCH COVER	1			
4	0715672	11398-425-000	GASKET, OIL PAN	1			
• 5	0923524	11691-425-010	PACKING, A.C. GENERATOR COVER	1			
6	0717108	30372-425-000	GASKET, POINT COVER	1			
7	0001065	91302-001-020	O-RING, 30.8MM	1			
8	0386995	91302-377-000	O-RING, 15X2.5	7			
9	0280404	91306-329-000	O-RING, 16X1.9	1			
10	1113406	91306-425-003	O-RING, 19.4X2.8	1			
11	0559419	91306-634-000	O-RING, 17X3.5MM	1			
12	1216126	91307-425-003	O-RING, 22X3.0	1			
13	1113422	91309-425-003	O-RING, 24.4X3.1	1			
14	1113455	91316-425-003	O-RING, 89X4.5	1			
15	1216142	91352-425-003	O-RING, 9.8X2.4	1			

CB1100F '83 Engine No.; SC11E—2000001 To Subsequent

© HONDA MOTOR CO., LTD. 1983

E 1

Block No.
F-1

Headlight

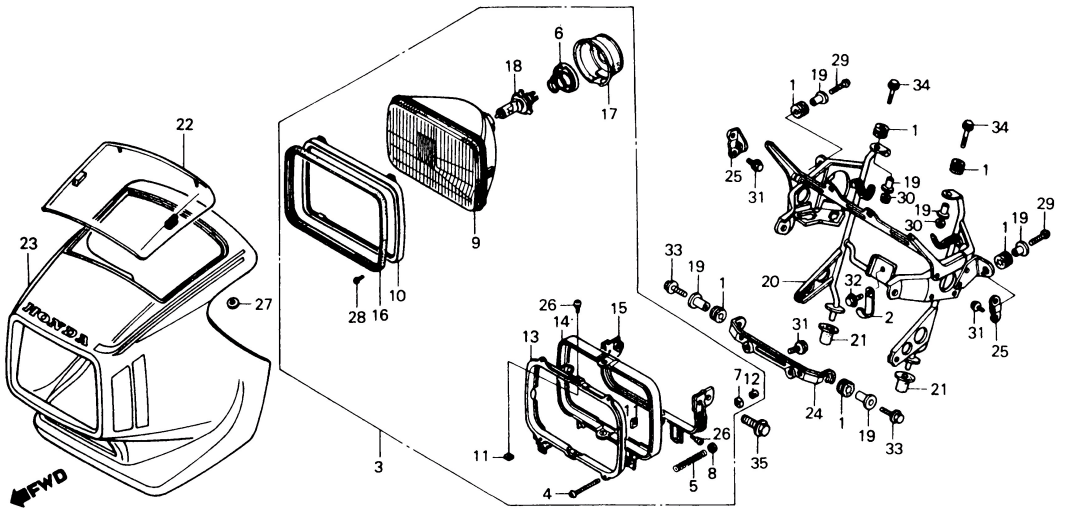

BMG5-8

CB1100F '83

Air cleaner	G 3	Handle lever	E 4
Battery	G 2	Handle pipe	E 7
Brake caliper FR.	F 2	Handle switch	E 4
Brake caliper RR.	F 6	Headlight	E 1
Brake master cylinder FR.	E 6	Ignition coil	H 5
Brake master cylinder RR.	F 5	Meter	E 3
Brake pedal	G 7	Oil cooler	H 6
Cable	E 4	Oil filter	C 3
Cam chain	B 6	Oil pan	C 3
Cam chain tensioner	B 6	Oil pump	C 1
Camshaft	B 4	Piston	C 6
Carburetor (Assy. • Link)	D 1	Regulator	F12
Carburetor (Component parts)	D 2	Seat	F11
Chain case	G11	Side cover	F12
Change pedal	G 7	Spark unit	F12
Clutch	B10	Stand	G10
Crankcase	C 4	Starting motor	B12
Crankcase cover L.	B11	Steering stem	E 9
Crankshaft	C 6	Step	G 8
Cushion RR.	H 1	Stripe	H10
Cylinder head	B 2	Taillight	H 4
Cylinder head cover	B 1	Tools	H 9
Exhaust muffler	G 5	Top bridge	E 7
Fender FR.	E10	Transmission	C10
Fender RR.	H 2	Valve	B 4
Fork FR.	E11	Wheel FR.	F 4
Fork RR.	G11	Wheel RR.	F 8
Frame body	H 6	Winker	H 3
Fuel tank	F10	Wire harness	H 5
Gearshift drum	C12		
Generator	B 8		

Ref. No.	H/C	Part No.	Description	Reqd. No. '83	Serial No. From	Serial No. To	Remarks
1	0213462	17245-107-010	RUBBER, AIR CLEANER CASE MOUNTING	6			
2	1054113	32901-MA1-000	CLIP, SUB CORD	1			
3	1305861	33100-MG5-671	HEADLIGHT ASSY. (12V 60/55W)	1			
4	1446780	33103-MG2-671	SCREW, BEAM ADJUSTING	2			
5	1243245	33108-MB0-003	SPRING, BEAM ADJUSTING	2			
6	1305895	33114-MC5-003	COVER, BULB	1			
7	1059401	33118-438-841	NUT, BEAM ADJUSTING	2			
8	0406082	33119-371-003	WASHER, BEAM ADJUSTING	2			
9	1305903	33120-MG5-671	HEADLIGHT UNIT	1			
10	1305911	33121-MC5-003	RING, RETAINING	1			
11	1059419	33128-438-841	NUT, UNIT HOLDER	4			
•12	1079664	33136-426-830	COVER, SCREW	2			
13	1305929	33153-MC5-003	RING, MOUNTING	1			
•14	1305937	33154-MC5-003	RING B, MOUNTING	1			
•15	1305945	33156-MC5-003	BRACKET, HEADLIGHT	1			
•16	1305952	33171-MC5-000	RUBBER, HEADLIGHT SHIELD	1			
17	1305960	33180-MC5-003	COVER, RUBBER	1			
18	1288612	34901-MC7-601	BULB, HEADLIGHT (H4 JA12V60/55W)	1			
19	0692202	61104-422-000	COLLAR, SETTING	6			
20	1307123	61311-MG5-670	BRACKET COMP., HEADLIGHT CASE	1			
21	0692244	61313-422-000	GROMMET B, HEADLIGHT	2			
22	1307149	64100-MC5-610	COVER, METER	1			
23	1307156	64200-MG5-670ZA	COVER COMP., HEADLIGHT *R-125C-A* (PEARL MAUI RED)	1			

CB1100F '83 Frame No.; SC110*DM000001 To Subsequent

© HONDA MOTOR CO., LTD. 1983

E 2

Block No.
F-1

Headlight

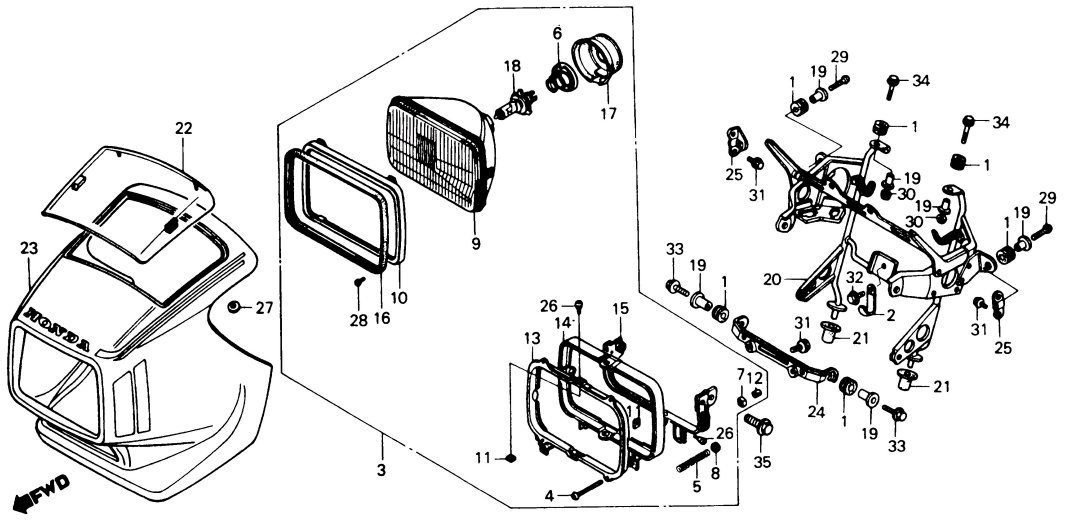

BMG5-8

CB1100F '83

Air cleaner	G 3	Handle lever	E 4
Battery	G 2	Handle pipe	E 7
Brake caliper FR.	F 2	Handle switch	E 4
Brake caliper RR.	F 6	Headlight	E 1
Brake master cylinder FR.	E 6	Ignition coil	H 5
Brake master cylinder RR.	F 5	Meter	E 3
Brake pedal	G 7	Oil cooler	H 6
Cable	E 4	Oil filter	C 3
Cam chain	B 6	Oil pan	C 3
Cam chain tensioner	B 6	Oil pump	C 1
Camshaft	B 4	Piston	C 6
Carburetor (Assy. • Link)	D 1	Regulator	F12
Carburetor (Component parts)	D 2	Seat	F11
Chain case	G11	Side cover	F12
Change pedal	G 7	Spark unit	F12
Clutch	B10	Stand	G10
Crankcase	C 4	Starting motor	B12
Crankcase cover L.	B11	Steering stem	E 9
Crankshaft	C 6	Step	G 8
Cushion RR.	H 1	Stripe	H10
Cylinder head	B 2	Taillight	H 4
Cylinder head cover	B 1	Tools	H 9
Exhaust muffler	G 5	Top bridge	E 7
Fender FR.	E10	Transmission	C10
Fender RR.	H 2	Valve	B 4
Fork FR.	E11	Wheel FR.	F 4
Fork RR.	G11	Wheel RR.	F 8
Frame body	H 6	Winker	H 3
Fuel tank	F10	Wire harness	H 5
Gearshift drum	C12		
Generator	B 8		

Ref. No.	H/C	Part No.	Description	Reqd. No. '83	Serial No. From	Serial No. To	Remarks
	1307164	64200-MG5-670ZB	COVER COMP., HEADLIGHT *PB-126C-A* (KAPIOLANI BLUE)	1			
24	1307180	64511-MG5-670	STAY, HEADLIGHT COVER (B)	1			
25	1307198	64513-MC5-000	STAY C, L. HEADLIGHT COVER	2			
26	1311018	90150-MC5-003	SCREW, PAN, 5X9	4			
27	0293837	90313-329-000	NUT B, PUSH, 3MM	4			
28	0486290	93500-03008-1A	SCREW, PAN, 3X8	4			
29	0791483	93500-06020-0G	SCREW, PAN, 6X20	2			
30	0471623	94050-06000	NUT, FLANGE, 6MM	2			
31	0663930	95700-06010-07	BOLT, FLANGE, 6X10	6			
32	0481176	95700-06012-07	BOLT, FLANGE, 6X12	1			
33	0476168	95700-06020-07	BOLT, FLANGE, 6X20	2			
34	1113570	95700-06032-07	BOLT, FLANGE, 6X32	2			

CB1100F '83 Frame No.; SC110•DM000001 To Subsequent

© HONDA MOTOR CO., LTD. 1983

E 3

Block No.
F-2

Meter

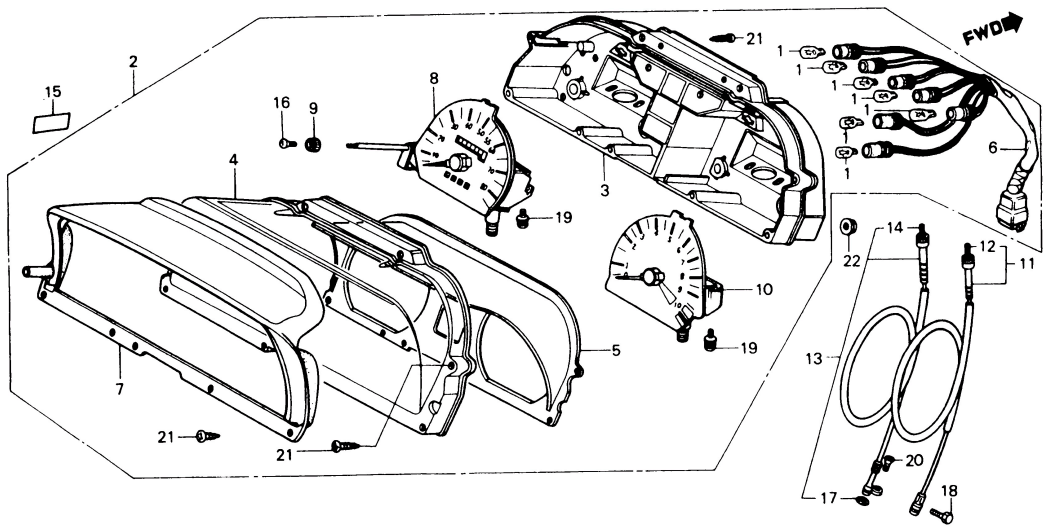

BMG5-9

CB1100F '83

Air cleaner	G 3	Handle lever	E 4
Battery	G 2	Handle pipe	E 7
Brake caliper FR.	F 2	Handle switch	E 4
Brake caliper RR.	F 6	Headlight	E 1
Brake master cylinder FR.	E 6	Ignition coil	H 5
Brake master cylinder RR.	F 5	Meter	E 3
Brake pedal	G 7	Oil cooler	H 6
Cable	E 4	Oil filter	C 3
Cam chain	B 6	Oil pan	C 3
Cam chain tensioner	B 6	Oil pump	C 1
Camshaft	B 4	Piston	C 6
Carburetor (Assy. • Link)	D 1	Regulator	F 12
Carburetor (Component parts)	D 2	Seat	F 11
Chain case	G11	Side cover	F 12
Change pedal	G 7	Spark unit	F 12
Clutch	B10	Stand	G10
Crankcase	C 4	Starting motor	B12
Crankcase cover L.	B11	Steering stem	E 9
Crankshaft	C 6	Step	G 8
Cushion RR.	H 1	Stripe	H10
Cylinder head	B 2	Taillight	H 4
Cylinder head cover	B 1	Tools	H 9
Exhaust muffler	G 5	Top bridge	E 7
Fender FR.	E10	Transmission	C10
Fender RR.	H 2	Valve	B 4
Fork FR.	E11	Wheel FR.	F 4
Fork RR.	G11	Wheel RR.	F 8
Frame body	H 6	Winker	H 3
Fuel tank	F 10	Wire harness	H 5
Gearshift drum	C12		
Generator	B 8		

Ref. No.	H/C	Part No.	Description	Reqd. No. '83	Serial No. From	To	Remarks
1	1084672	34908-GA7-701	BULB, WEDGE BASE (12V3.4W)	7			
2	1306109	37100-MG5-671	METER ASSY., COMBINATION (MPH)	1			
3	1306117	37101-MG5-008	CASE ASSY., METER	1			
4	1306125	37102-MC5-008	GLASS	1			
5	1306133	37103-MG5-008	PLATE ASSY., REFLECTING	1			
6	1306141	37105-MG5-008	SOCKET COMP.	1			
7	1306158	37110-MC5-008	COVER, METER UPPER	1			
8	1306166	37200-MG5-671	SPEEDOMETER ASSY. (MPH)	1			
9	1215284	37204-MC7-611	KNOB, TRIP METER	1			
10	1306174	37250-MG5-671	TACHOMETER ASSY.	1			
11	1306182	37260-MG5-670	CABLE ASSY., TACHOMETER	1			
12	1306190	37261-MG5-670	CABLE, INNER	1			
13	1306430	44830-MG5-670	CABLE ASSY., SPEEDOMETER	1			
14	1306448	44831-MG5-670	CABLE, INNER	1			
15	0699041	87523-102-720	LABEL, BREAK IN CAUTION	1			
16	1216001	90600-MC7-611	SCREW, FLAT, 2.3X8	1			
17	0018044	91301-027-000	O-RING, 6.8X1.9	1			
18	0175893	92000-05020-0A	BOLT, HEX., 5X20	1			
19	0285627	93500-04006-0H	SCREW, PAN, 4X6	4			
20	0768721	93700-05020-0G	SCREW, OVAL, 5X20	1			
21	0562066	93901-34410	SCREW, TAPPING, 4X16	7			
22	0057893	94021-06020	NUT, CAP, 6MM	2			

CB1100F '83 Frame No.; SC110*DM000001 To Subsequent

© HONDA MOTOR CO., LTD. 1983

E 4

Block No.
F-3

Handle lever • Cable • Switch

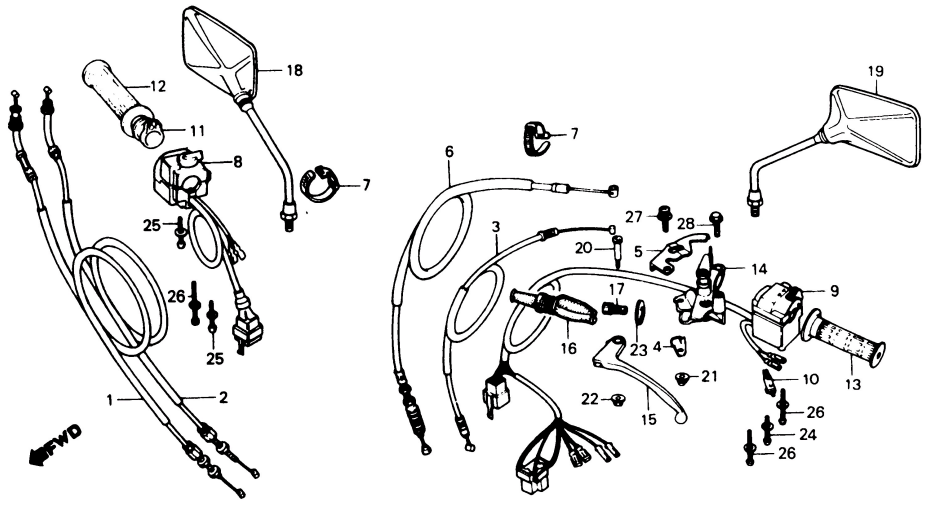

BMG5-10

CB1100F '83

Air cleaner	G 3	Handle lever	E 4
Battery	G 2	Handle pipe	E 7
Brake caliper FR.	F 2	Handle switch	E 4
Brake caliper RR.	F 6	Headlight	E 1
Brake master cylinder FR.	E 6	Ignition coil	H 5
Brake master cylinder RR.	F 5	Meter	E 3
Brake pedal	G 7	Oil cooler	H 6
Cable	E 4	Oil filter	C 3
Cam chain	B 6	Oil pan	C 3
Cam chain tensioner	B 6	Oil pump	C 1
Camshaft	B 4	Piston	C 6
Carburetor (Assy. • Link)	D 1	Regulator	F 12
Carburetor (Component parts)	D 2	Seat	F 11
Chain case	G11	Side cover	F 12
Change pedal	G 7	Spark unit	F 12
Clutch	B10	Stand	G10
Crankcase	C 4	Starting motor	B12
Crankcase cover L.	B11	Steering stem	E 9
Crankshaft	C 6	Step	G 8
Cushion RR.	H 1	Stripe	H10
Cylinder head	B 2	Taillight	H 4
Cylinder head cover	B 1	Tools	H 9
Exhaust muffler	G 5	Top bridge	E 7
Fender FR.	E10	Transmission	C10
Fender RR.	H 2	Valve	B 4
Fork FR.	E11	Wheel FR.	F 4
Fork RR.	G11	Wheel RR.	F 8
Frame body	H 6	Winker	H 3
Fuel tank	F10	Wire harness	H 5
Gearshift drum	C12		
Generator	B 8		

Ref. No.	H/C	Part No.	Description	Reqd. No. '83	Serial No. From	Serial No. To	Remarks
1	1305408	17910-MG5-670	CABLE COMP. A, THROTTLE	1			
2	1305416	17920-MG5-670	CABLE COMP. B, THROTTLE	1			
3	1305424	17950-MG5-670	CABLE COMP., CHOKE	1			
4	0692509	17963-422-000	HOLDER, CHOKE CABLE	1			
5	1305432	17964-MA2-000	COVER, CHOKE ARM	1			
6	1305598	22870-MG5-670	CABLE COMP., CLUTCH	1			
7	0468819	32161-404-000	BAND B1, WIRE	2			
8	1306075	35130-MG5-670	SWITCH ASSY., STARTER KILL	1			
9	1306083	35200-MG5-670	SWITCH ASSY., WINKER	1			
10	0494856	35330-413-003	SWITCH COMP., FR. LEVER	1			
11	0237586	53141-300-010	PIPE, THROTTLE GRIP	1			
12	0483420	53165-390-780	GRIP, R. HANDLE	1			
13	0483438	53166-390-780	GRIP, L. HANDLE	1			
14	1060219	53170-MA2-000	BRACKET ASSY., HANDLE LEVER	1			
•15	0923136	53178-422-020	LEVER, L. STEERING HANDLE	1			
•16	0942383	53180-422-020	BOOT, HANDLE LEVER	1			
17	0692616	53192-422-000	BOLT, CABLE ADJUSTING	1			
18	1310929	88110-MC5-004	MIRROR, R. BACK	1			
19	1310937	88120-MC5-004	MIRROR, L. BACK	1			
20	0923128	90113-438-000	BOLT, L. STEERING HANDLE LEVER PIVOT	1			
21	1213099	90167-SA0-980	NUT, FLANGE CAP, 5MM	1			
22	1089499	90301-428-900	NUT, FLANGE, 6MM	1			
23	0692640	90321-422-000	NUT, FIXING	1			
24	0743047	93891-05030-07	SCREW-WASHER, 5X30	1			
25	0719500	93891-05035-07	SCREW-WASHER, 5X35	2			
26	0743054	93891-05050-07	SCREW-WASHER, 5X50	3			

CB1100F '83 Frame No.; SC110•DM000001 To Subsequent

© HONDA MOTOR CO., LTD. 1983

E 5

Block No.
F-3

Handle lever • Cable • Switch

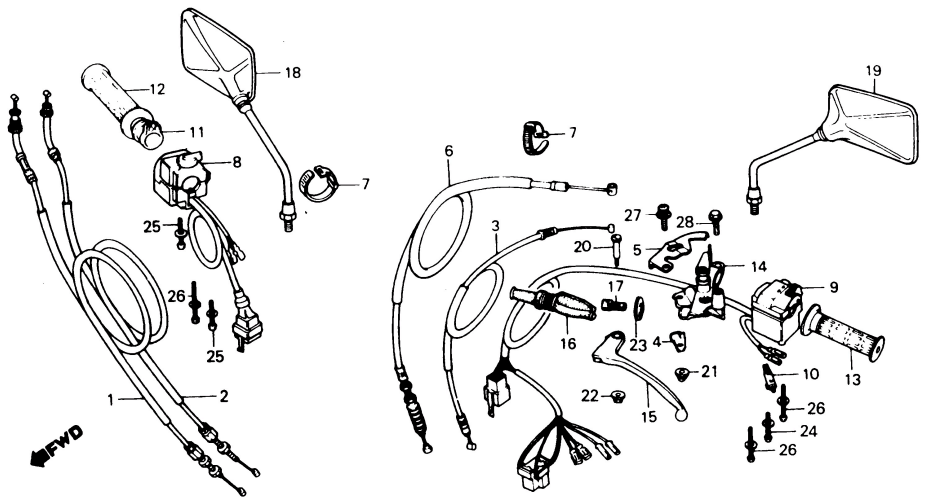

BMG5 – 10

CB1100F '83

Air cleaner	G 3	Handle lever	E 4
Battery	G 2	Handle pipe	E 7
Brake caliper FR.	F 2	Handle switch	E 4
Brake caliper RR.	F 6	Headlight	E 1
Brake master cylinder FR.	E 6	Ignition coil	H 5
Brake master cylinder RR.	F 5	Meter	E 3
Brake pedal	G 7	Oil cooler	H 6
Cable	E 4	Oil filter	C 3
Cam chain	B 6	Oil pan	C 3
Cam chain tensioner	B 6	Oil pump	C 1
Camshaft	B 4	Piston	C 6
Carburetor (Assy. • Link)	D 1	Regulator	F 12
Carburetor (Component parts)	D 2	Seat	F 11
Chain case	G11	Side cover	F 12
Change pedal	G 7	Spark unit	F 12
Clutch	B10	Stand	G10
Crankcase	C 4	Starting motor	B12
Crankcase cover L.	B11	Steering stem	E 9
Crankshaft	C 6	Step	G 8
Cushion RR.	H 1	Stripe	H10
Cylinder head	B 2	Taillight	H 4
Cylinder head cover	B 1	Tools	H 9
Exhaust muffler	G 5	Top bridge	E 7
Fender FR.	E10	Transmission	C10
Fender RR.	H 2	Valve	B 4
Fork FR.	E11	Wheel FR.	F 4
Fork RR.	G11	Wheel RR.	F 8
Frame body	H 6	Winker	H 3
Fuel tank	F10	Wire harness	H 5
Gearshift drum	C12		
Generator	B 8		

Ref. No.	H/C	Part No.	Description	Reqd. No. '83	Serial No. From	Serial No. To	Remarks
27	0771360	93892-05010-07	SCREW-WASHER, 5X10	1			
28	1251941	96000-06025-07	BOLT, FLANGE, 6X25	1			

CB1100F '83 Frame No.; SC110*DM000001 To Subsequent

© HONDA MOTOR CO., LTD. 1983

E 6

Block No.
F-4

Front brake master cylinder

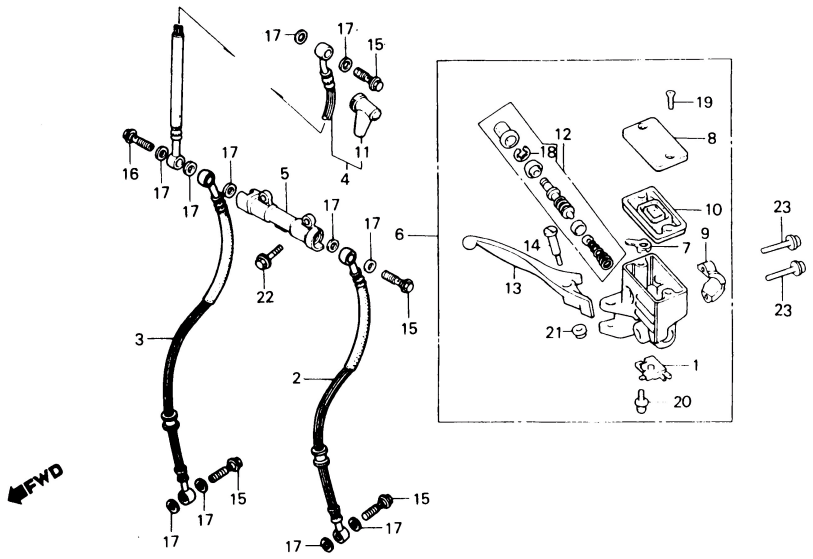

CB1100F '83

Air cleaner	G 3	Handle lever	E 4
Battery	G 2	Handle pipe	E 7
Brake caliper FR.	F 2	Handle switch	E 4
Brake caliper RR.	F 6	Headlight	E 1
Brake master cylinder FR.	E 6	Ignition coil	H 5
Brake master cylinder RR.	F 5	Meter	E 3
Brake pedal	G 7	Oil cooler	H 6
Cable	E 4	Oil filter	C 3
Cam chain	B 6	Oil pan	C 3
Cam chain tensioner	B 6	Oil pump	C 1
Camshaft	B 4	Piston	C 6
Carburetor (Assy. • Link)	D 1	Regulator	F12
Carburetor (Component parts)	D 2	Seat	F11
Chain case	G11	Side cover	F12
Change pedal	G 7	Spark unit	F12
Clutch	B10	Stand	G10
Crankcase	C 4	Starting motor	B12
Crankcase cover L.	B11	Steering stem	E 9
Crankshaft	C 6	Step	G 8
Cushion RR.	H 1	Stripe	H10
Cylinder head	B 2	Taillight	H 4
Cylinder head cover	B 1	Tools	H 9
Exhaust muffler	G 5	Top bridge	E 7
Fender FR.	E10	Transmission	C10
Fender RR.	H 2	Valve	B 4
Fork FR.	E11	Wheel FR.	F 4
Fork RR.	G11	Wheel RR.	F 8
Frame body	H 6	Winker	H 3
Fuel tank	F10	Wire harness	H 5
Gearshift drum	C12		
Generator	B 8		

Ref. No.	H/C	Part No.	Description	Reqd. No. '83	Serial No. From	To	Remarks
1	0952267	35340-MA5-671	SWITCH ASSY., FR. STOP	1			
2	1306471	45124-MG5-671	HOSE A, L. FR. BRAKE	1			
3	1306489	45125-MG5-671	HOSE A, R. FR. BRAKE	1			
4	1306497	45126-MG5-671	HOSE ASSY. B, FR. BRAKE	1			
5	0692749	45127-422-003	JOINT, TWO WAY	1			
6	1306547	45500-MA7-006	CYLINDER ASSY., FR. MASTER	1			
7	1235688	45512-MA6-006	PROTECTOR	1			
8	0952333	45513-MA5-671	CAP, OIL CUP	1			
9	0952341	45517-MA5-671	HOLDER, MASTER CYLINDER	1			
10	0952358	45520-MA5-671	DIAPHRAGM	1			
11	0692822	45522-422-000	BOOT, MASTER CYLINDER	1			
12	0952366	45530-MA5-671	CYLINDER SET, MASTER	1			
• 13	1397512	53175-MA6-006	LEVER COMP., R. STEERING HANDLE	1			
14	0952416	90114-MA5-671	BOLT, R. STEERING HANDLE LEVER PIVOT	1			
15	1310994	90145-KE8-000	BOLT, OIL, 10X22	4			
16	1311000	90145-MG5-670	BOLT, OIL, 10X34	1			
17	0189902	90545-300-000	WASHER, OIL BOLT	11			
18	1251404	90651-MA5-671	CIRCLIP	1			
19	0954594	93600-04045-1G	SCREW, FLAT, 4X45	2			
20	0954412	93893-04012-18	SCREW-WASHER, 4X12	1			
21	0471623	94050-06000	NUT, FLANGE, 6MM	1			
22	0476168	95700-06020-07	BOLT, FLANGE, 6X20	2			
23	1251941	96000-06025-07	BOLT, FLANGE, 6X25	2			

CB1100F '83 Frame No.; SC110•DM000001 To Subsequent

© HONDA MOTOR CO., LTD. 1983

E 7

Block No.
F-5

Handle pipe • Top bridge

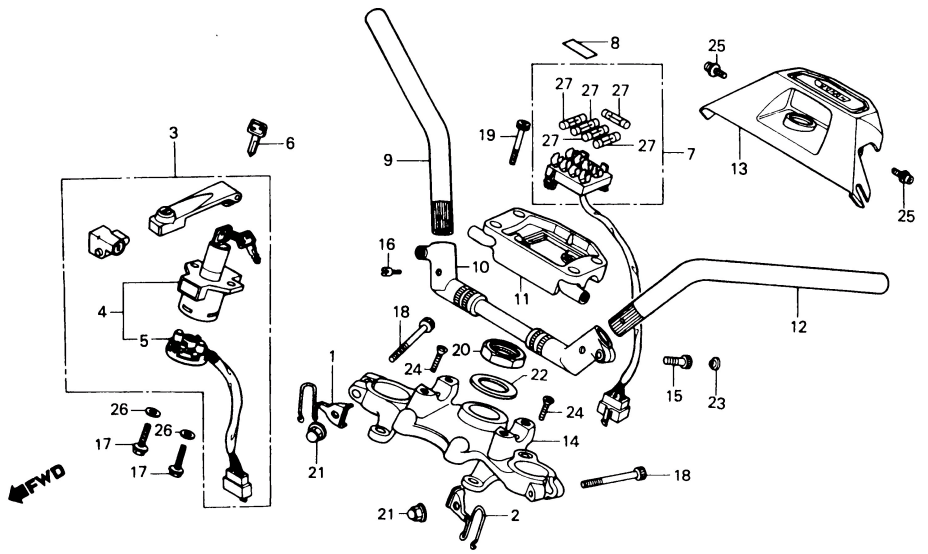

BMG5 – 12

CB1100F '83

Air cleaner	G 3	Handle lever	E 4
Battery	G 2	Handle pipe	E 7
Brake caliper FR.	F 2	Handle switch	E 4
Brake caliper RR.	F 6	Headlight	E 1
Brake master cylinder FR.	E 6	Ignition coil	H 5
Brake master cylinder RR.	F 5	Meter	E 3
Brake pedal	G 7	Oil cooler	H 6
Cable	E 4	Oil filter	C 3
Cam chain	B 6	Oil pan	C 3
Cam chain tensioner	B 6	Oil pump	C 1
Camshaft	B 4	Piston	C 6
Carburetor (Assy. • Link)	D 1	Regulator	F 12
Carburetor (Component parts)	D 2	Seat	F 11
Chain case	G11	Side cover	F 12
Change pedal	G 7	Spark unit	F 12
Clutch	B10	Stand	G10
Crankcase	C 4	Starting motor	B12
Crankcase cover L.	B11	Steering stem	E 9
Crankshaft	C 6	Step	G 8
Cushion RR.	H 1	Stripe	H10
Cylinder head	B 2	Taillight	H 4
Cylinder head cover	B 1	Tools	H 9
Exhaust muffler	G 5	Top bridge	E 7
Fender FR.	E10	Transmission	C10
Fender RR.	H 2	Valve	B 4
Fork FR.	E11	Wheel FR.	F 4
Fork RR.	G11	Wheel RR.	F 8
Frame body	H 6	Winker	H 3
Fuel tank	F10	Wire harness	H 5
Gearshift drum	C12		
Generator	B 8		

Ref. No.	H/C	Part No.	Description	Reqd. No. '83	Serial No. From	To	Remarks
1	1305382	17908-MG5-670	GUIDE, R. CABLE	1			
2	1305390	17909-MG5-670	GUIDE, L. CABLE	1			
3	1306059	35010-MG5-670	KEY SET	1			
4	1306067	35100-MA6-007	SWITCH ASSY., COMBINATION	1			
5	1246743	35101-MA6-007	BASE COMP., CONTACT	1			
6	1246750	35121-MA6-811	KEY, BLANK (TYPE 1)	(1)			
	1246768	35122-MA6-811	KEY, BLANK (TYPE 2)	(1)			
7	0954602	38200-MA4-671	PLATE ASSY., FUSE	1			
8	1306208	38215-MG5-670	LABEL, FUSE	1			
9	1306950	53100-MG5-670	PIPE, R. STREEING HANDLE	1			
10	1306968	53101-MG5-670	HOLDER, HANDLE ADJUSTING	1			
11	1306976	53131-MG5-670	HOLDER, HANDLE UPPER	1			
12	1307040	53150-MG5-670	PIPE, L. STEERING HANDLE	1			
13	1307065	53205-MG5-670	COVER, HANDLE	1			
14	1307073	53230-MG5-670	BRIDGE, FORK TOP	1			
15	1243500	90061-MB0-000	BOLT, SOCKET, 8X22	2			
16	1310960	90101-MG5-670	SCREW, STOPPER, 4MM	2			
17	1223619	90105-KB7-000	BOLT, FLANGE, 8X19	2			
18	0693028	90167-422-000	BOLT, SOCKET, 7X55	2			
19	0409029	90185-371-000	BOLT, HEX. SOCKET, 8X32	4			
20	0719401	90304-425-000	NUT, STEERING STEM	1			
21	0693044	90360-422-000	NUT, CAP, 7MM	2			
22	0719443	90503-425-000	WASHER, STEERING STEM	1			
23	0432195	91456-371-770	CAP, SOCKET BOLT	2			
24	1311299	93700-06040-0G	SCREW, OVAL, 6X40	2			
25	0860866	93891-05012-07	SCREW-WASHER, 5X12	2			
26	0268276	94102-08200	WASHER, PLAIN, 8MM	2			

* ( ) IN THE REQD. NO. COLUMN INDICATES AN OPTIONAL PART OR A SELECTIVE PART.

CB1100F '83 Frame No.; SC110*DM000001 To Subsequent

© HONDA MOTOR CO., LTD. 1983

E 8

Block No.
F-5

Handle pipe • Top bridge

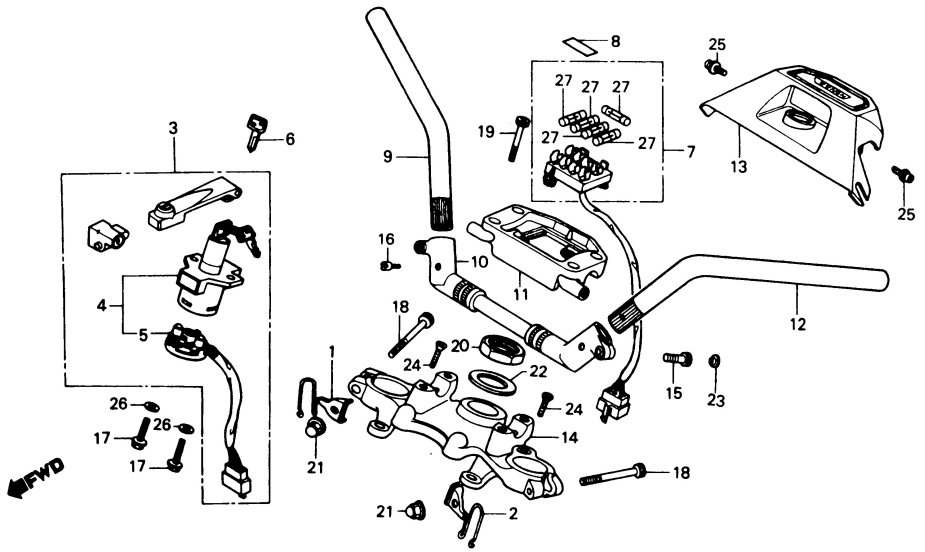

CB1100F '83

Air cleaner	G 3	Handle lever	E 4
Battery	G 2	Handle pipe	E 7
Brake caliper FR.	F 2	Handle switch	E 4
Brake caliper RR.	F 6	Headlight	E 1
Brake master cylinder FR.	E 6	Ignition coil	H 5
Brake master cylinder RR.	F 5	Meter	E 3
Brake pedal	G 7	Oil cooler	H 6
Cable	E 4	Oil filter	C 3
Cam chain	B 6	Oil pan	C 3
Cam chain tensioner	B 6	Oil pump	C 1
Camshaft	B 4	Piston	C 6
Carburetor (Assy. • Link)	D 1	Regulator	F12
Carburetor (Component parts)	D 2	Seat	F11
Chain case	G11	Side cover	F12
Change pedal	G 7	Spark unit	F12
Clutch	B10	Stand	G10
Crankcase	C 4	Starting motor	B12
Crankcase cover L.	B11	Steering stem	E 9
Crankshaft	C 6	Step	G 8
Cushion RR.	H 1	Stripe	H10
Cylinder head	B 2	Taillight	H 4
Cylinder head cover	B 1	Tools	H 9
Exhaust muffler	G 5	Top bridge	E 7
Fender FR.	E10	Transmission	C10
Fender RR.	H 2	Valve	B 4
Fork FR.	E11	Wheel FR.	F 4
Fork RR.	G11	Wheel RR.	F 8
Frame body	H 6	Winker	H 3
Fuel tank	F10	Wire harness	H 5
Gearshift drum	C12		
Generator	B 8		

Ref. No.	H/C	Part No.	Description	Reqd. No. '83	Serial No. From	To	Remarks
27	0252387	98200-21500	FUSE B (15A)	5			

CB1100F '83 Frame No.; SC110*DM000001 To Subsequent

© HONDA MOTOR CO., LTD. 1983

E 9

Block No.
F-6

Steering stem

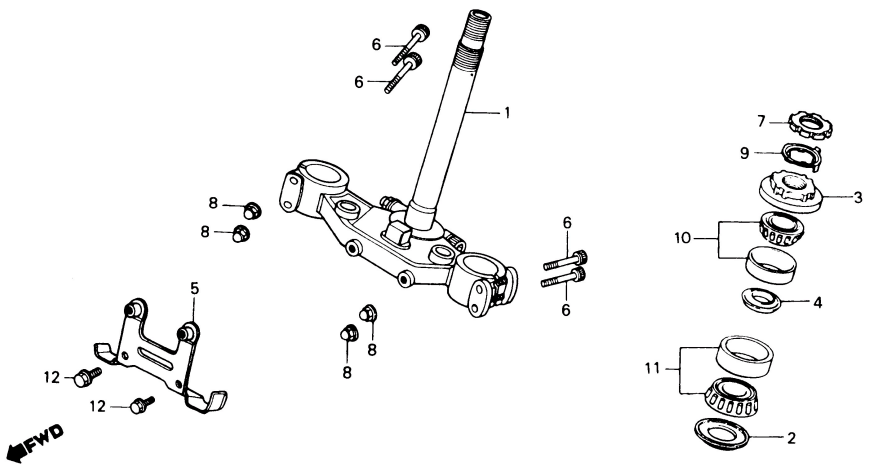

BMG5-13

CB1100F '83

Air cleaner	G 3	Handle lever	E 4
Battery	G 2	Handle pipe	E 7
Brake caliper FR.	F 2	Handle switch	E 4
Brake caliper RR.	F 6	Headlight	E 1
Brake master cylinder FR.	E 6	Ignition coil	H 5
Brake master cylinder RR.	F 5	Meter	E 3
Brake pedal	G 7	Oil cooler	H 6
Cable	E 4	Oil filter	C 3
Cam chain	B 6	Oil pan	C 3
Cam chain tensioner	B 6	Oil pump	C 1
Camshaft	B 4	Piston	C 6
Carburetor (Assy. • Link)	D 1	Regulator	F 12
Carburetor (Component parts)	D 2	Seat	F 11
Chain case	G 11	Side cover	F 12
Change pedal	G 7	Spark unit	F 12
Clutch	B 10	Stand	G 10
Crankcase	C 4	Starting motor	B 12
Crankcase cover L.	B 11	Steering stem	E 9
Crankshaft	C 6	Step	G 8
Cushion RR.	H 1	Stripe	H 10
Cylinder head	B 2	Taillight	H 4
Cylinder head cover	B 1	Tools	H 9
Exhaust muffler	G 5	Top bridge	E 7
Fender FR.	E 10	Transmission	C 10
Fender RR.	H 2	Valve	B 4
Fork FR.	E 11	Wheel FR.	F 4
Fork RR.	G 11	Wheel RR.	F 8
Frame body	H 6	Winker	H 3
Fuel tank	F 10	Wire harness	H 5
Gearshift drum	C 12		
Generator	B 8		

Ref. No.	H/C	Part No.	Description	Reqd. No. '83	Serial No. From	To	Remarks
1	1307057	53200-MG5-670	STEM COMP., STEERING	1			
2	0470948	53214-371-010	DUST SEAL, STEERING HEAD	1			
3	1112291	53220-460-840	THREAD COMP., STEERING HEAD TOP	1			
4	0470955	53223-371-010	HOLDER, GREASE	1			
5	1307131	61312-MG5-670	STAY, TWO WAY JOINT	1			
6	1311117	90166-MG5-670	BOLT, SOCKET, 8X55	4			
7	0823930	90302-425-830	THREAD B, STEERING HEAD TOP	1			
8	0693051	90443-379-690	NUT, CAP, 8MM	4			
9	0823948	90506-425-830	WASHER, LOCK	1			
10	0823955	91015-425-831	BEARING, HEAD PIPE UPPER (TOYO)	1			
	0923227	91015-425-832	BEARING, HEAD PIPE UPPER (NACHI)	1			
11	0471284	91016-371-000	BEARING, HEAD PIPE UNDER	1			
12	0481176	95700-06012-07	BOLT, FLANGE, 6X12	2			

CB1100F '83 Frame No.; SC110•DM000001 To Subsequent

© HONDA MOTOR CO., LTD. 1983

E 10

Block No.
F-7

Front fender

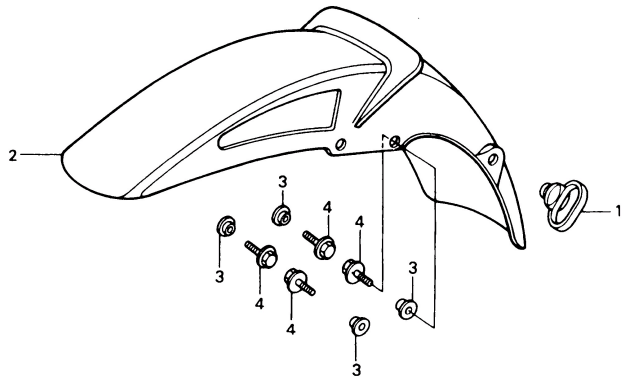

BMG5–14

Ref. No.	H/C	Part No.	Description	Reqd. No. '83	Serial No. From	Serial No. To	Remarks
1	1052265	45451-471-000	GROMMET, WIRE	1			
2	1307099	61100-MG5-670ZA	FENDER, FR. *R-125C-A* (PEARL MAUI RED)	1			
	1307107	61100-MG5-670ZB	FENDER, FR. *PB-126C-A* (KAPIOLANI BLUE)	1			
3	1215706	61101-441-000	COLLAR, FR. FENDER SETTING	4			
4	0681213	93494-06016-08	BOLT-WASHER, 6X16	4			

CB1100F '83

Air cleaner	G 3	Handle lever	E 4
Battery	G 2	Handle pipe	E 7
Brake caliper FR.	F 2	Handle switch	E 4
Brake caliper RR.	F 6	Headlight	E 1
Brake master cylinder FR.	E 6	Ignition coil	H 5
Brake master cylinder RR.	F 5	Meter	E 3
Brake pedal	G 7	Oil cooler	H 6
Cable	E 4	Oil filter	C 3
Cam chain	B 6	Oil pan	C 3
Cam chain tensioner	B 6	Oil pump	C 1
Camshaft	B 4	Piston	C 6
Carburetor (Assy. • Link)	D 1	Regulator	F 12
Carburetor (Component parts)	D 2	Seat	F 11
Chain case	G11	Side cover	F 12
Change pedal	G 7	Spark unit	F 12
Clutch	B10	Stand	G10
Crankcase	C 4	Starting motor	B12
Crankcase cover L.	B11	Steering stem	E 9
Crankshaft	C 6	Step	G 8
Cushion RR.	H 1	Stripe	H10
Cylinder head	B 2	Taillight	H 4
Cylinder head cover	B 1	Tools	H 9
Exhaust muffler	G 5	Top bridge	E 7
Fender FR.	E10	Transmission	C10
Fender RR.	H 2	Valve	B 4
Fork FR.	E11	Wheel FR.	F 4
Fork RR.	G11	Wheel RR.	F 8
Frame body	H 6	Winker	H 3
Fuel tank	F10	Wire harness	H 5
Gearshift drum	C12		
Generator	B 8		

CB1100F '83 Frame No.; SC110*DM000001 To Subsequent

© HONDA MOTOR CO., LTD. 1983

E 11

Block No.
F-8

Front fork

CB1100F '83

Air cleaner	G 3	Handle lever	E 4
Battery	G 2	Handle pipe	E 7
Brake caliper FR.	F 2	Handle switch	E 4
Brake caliper RR.	F 6	Headlight	E 1
Brake master cylinder FR.	E 6	Ignition coil	H 5
Brake master cylinder RR.	F 5	Meter	E 3
Brake pedal	G 7	Oil cooler	H 6
Cable	E 4	Oil filter	C 3
Cam chain	B 6	Oil pan	C 3
Cam chain tensioner	B 6	Oil pump	C 1
Camshaft	B 4	Piston	C 6
Carburetor (Assy. • Link)	D 1	Regulator	F 12
Carburetor (Component parts)	D 2	Seat	F 11
Chain case	G 11	Side cover	F 12
Change pedal	G 7	Spark unit	F 12
Clutch	B 10	Stand	G 10
Crankcase	C 4	Starting motor	B 12
Crankcase cover L.	B 11	Steering stem	E 9
Crankshaft	C 6	Step	G 8
Cushion RR.	H 1	Stripe	H 10
Cylinder head	B 2	Taillight	H 4
Cylinder head cover	B 1	Tools	H 9
Exhaust muffler	G 5	Top bridge	E 7
Fender FR.	E 10	Transmission	C 10
Fender RR.	H 2	Valve	B 4
Fork FR.	E 11	Wheel FR.	F 4
Fork RR.	G 11	Wheel RR.	F 8
Frame body	H 6	Winker	H 3
Fuel tank	F 10	Wire harness	H 5
Gearshift drum	C 12		
Generator	B 8		

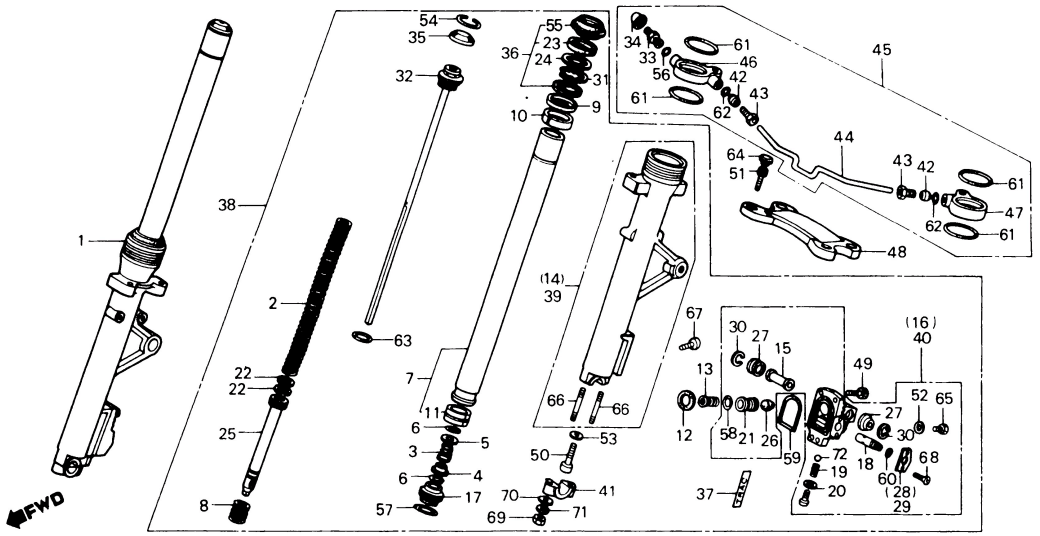

BMG5-15

Ref. No.	H/C	Part No.	Description	Reqd. No. '83	Serial No. From	To	Remarks
1	1306737	51400-MG5-671	FORK ASSY., R. FR.	1			
2	1306745	51401-MG5-671	SPRING, FR. CUSHION	2			
3	1289222	51402-MB7-611	SPRING, OIL LOCK	2			
4	1289248	51403-MB7-611	VALVE, OIL LOCK	2			
5	1289255	51404-MB7-611	SEAT, SPRING	2			
6	1289263	51405-MB7-611	RING, STOPPER	4			
7	1306752	51410-MG5-671	PIPE, FR. FORK	2			
8	0884106	51411-463-003	SPRING, FR. FORK REBOUND	2			
9	1039312	51412-463-305	RING, BACK UP	2			
10	0884130	51414-463-003	BUSH, FORK PIPE	2			
11	0884148	51415-463-003	SLEEVE, FORK PIPE	2			
12	1215557	51417-MC7-003	PACKING	2			
13	1264225	51418-MC7-013	SPRING, PISTON	2			
14	1306760	51421-MG5-671	CASE COMP., R. BOTTOM	1			
15	1212224	51423-MC7-003	COLLAR, PISTON	2			
16	1306778	51430-MB7-611	CASE COMP., R. PISTON	1			
17	1306786	51432-MG5-671	PIECE, OIL LOCK	2			
18	1212240	51433-MC7-003	ROD, ADJUSTER	2			
19	1212257	51434-MC7-003	SPRING, CLICK	2			
20	1217413	51435-MC7-003	WASHER, SPECIAL, 5MM	2			
21	1306794	51436-MA3-661	PISTON	2			
22	0884171	51437-463-003	RING, PISTON	4			
23	1289354	51438-MB9-781	HOLDER, GREASE	2			
24	1289362	51439-MB9-781	WASHER, HOLDER	2			
25	1306802	51440-MG5-671	PIPE COMP., SEAT	2			
26	1212281	51441-MC7-003	RUBBER, STOPPER	2			
27	1212299	51442-MC7-003	BOOT, PISTON CASE	4			

CB1100F '83 Frame No.; SC110•DM000001 To Subsequent

© HONDA MOTOR CO., LTD. 1983

E 12

Block No.
F-8

Front fork

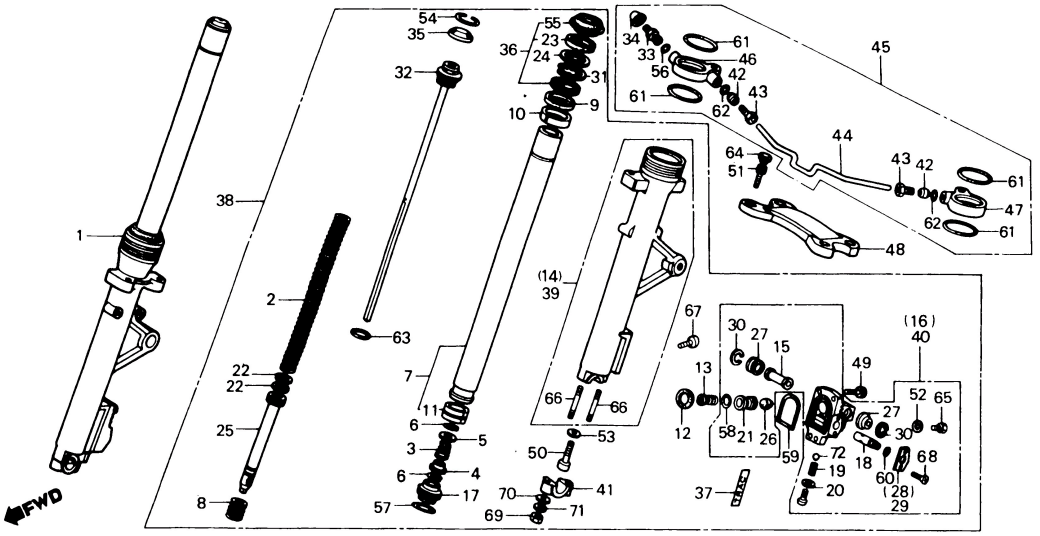

BMG5-15

CB1100F '83

Air cleaner	G 3	Handle lever	E 4
Battery	G 2	Handle pipe	E 7
Brake caliper FR.	F 2	Handle switch	E 4
Brake caliper RR.	F 6	Headlight	E 1
Brake master cylinder FR.	E 6	Ignition coil	H 5
Brake master cylinder RR.	F 5	Meter	E 3
Brake pedal	G 7	Oil cooler	H 6
Cable	E 4	Oil filter	C 3
Cam chain	B 6	Oil pan	C 3
Cam chain tensioner	B 6	Oil pump	C 1
Camshaft	B 4	Piston	C 6
Carburetor (Assy. • Link)	D 1	Regulator	F 12
Carburetor (Component parts)	D 2	Seat	F 11
Chain case	G11	Side cover	F 12
Change pedal	G 7	Spark unit	F 12
Clutch	B10	Stand	G10
Crankcase	C 4	Starting motor	B12
Crankcase cover L.	B11	Steering stem	E 9
Crankshaft	C 6	Step	G 8
Cushion RR.	H 1	Stripe	H10
Cylinder head	B 2	Taillight	H 4
Cylinder head cover	B 1	Tools	H 9
Exhaust muffler	G 5	Top bridge	E 7
Fender FR.	E10	Transmission	C10
Fender RR.	H 2	Valve	B 4
Fork FR.	E11	Wheel FR.	F 4
Fork RR.	G11	Wheel RR.	F 8
Frame body	H 6	Winker	H 3
Fuel tank	F 10	Wire harness	H 5
Gearshift drum	C12		
Generator	B 8		

Ref. No.	H/C	Part No.	Description	Reqd. No. '83	Serial No. From	To	Remarks
28	1304617	51443-MC7-013	WASHER, R. SIDE	1			
29	1291913	51444-MC7-013	WASHER, L. SIDE	1			
30	1212315	51445-MC7-003	HOLDER, BOOT	4			
31	0884197	51447-463-003	CIRCLIP, INTERNAL, 50	2			
32	1306828	51454-MG5-671	BOLT ASSY., FR. FORK	2			
33	0950428	51456-469-013	VALVE COMP., AIR (SHOWA)	1			
34	0874727	51457-469-000	CAP ASSY., AIR VALVE	1			
35	1306836	51458-MG5-671	CAP, ADJUSTING PLATE	2			
36	1289412	51490-MB9-781	SEAL SET, FR. FORK	2			
37	1249390	51496-MC7-670	MARK, FR. FORK	2			
38	1306844	51500-MG5-671	FORK ASSY., L. FR.	1			
39	1306851	51521-MG5-671	CASE COMP., L. BOTTOM	1			
40	1306869	51530-MB7-611	CASE COMP., L. PISTON	1			
41	0483370	51634-410-003	HOLDER, FR. FORK AXLE	2			
42	1306984	53134-MG5-671	SLEEVE	2			
43	1306992	53135-MG5-671	BOLT, HEX.	2			
44	1307008	53136-MG5-671	PIPE, AIR	1			
45	1307016	53137-MG5-671	EQUALIZER, FR. FORK	1			
46	1307024	53138-MG5-671	JOINT, R. AIR	1			
47	1307032	53139-MG5-671	JOINT, L. AIR	1			
48	1307081	53240-MG5-670	STABILIZER, FR. FORK	1			
49	1213016	90116-MC7-003	BOLT, SOCKET, 6MM	8			
50	0254169	90116-283-010	BOLT, SOCKET, 8MM	2			
51	1310986	90131-MA7-000	BOLT, SOCKET, 8X20	4			
52	0052209	90543-273-000	PACKING, FR. FORK DRAIN COCK	2			
53	0259457	90544-283-000	WASHER, SPECIAL, 8MM	2			
•54	1318476	90602-MG5-670	RING, STOPPER	2			

CB1100F '83 Frame No.; SC110•DM000001 To Subsequent

© HONDA MOTOR CO., LTD. 1983

F 1

Block No.
F-8

Front fork

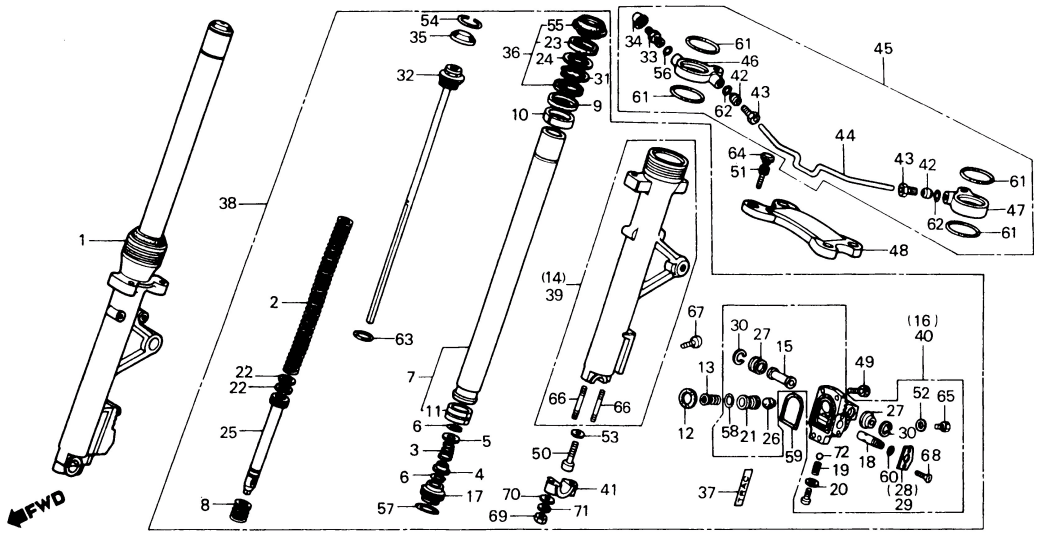

CB1100F '83

Air cleaner	G 3	Handle lever	E 4
Battery	G 2	Handle pipe	E 7
Brake caliper FR.	F 2	Handle switch	E 4
Brake caliper RR.	F 6	Headlight	E 1
Brake master cylinder FR.	E 6	Ignition coil	H 5
Brake master cylinder RR.	F 5	Meter	E 3
Brake pedal	G 7	Oil cooler	H 6
Cable	E 4	Oil filter	C 3
Cam chain	B 6	Oil pan	C 3
Cam chain tensioner	B 6	Oil pump	C 1
Camshaft	B 4	Piston	C 6
Carburetor (Assy. • Link)	D 1	Regulator	F 12
Carburetor (Component parts)	D 2	Seat	F 11
Chain case	G11	Side cover	F 12
Change pedal	G 7	Spark unit	F 12
Clutch	B10	Stand	G10
Crankcase	C 4	Starting motor	B12
Crankcase cover L.	B11	Steering stem	E 9
Crankshaft	C 6	Step	G 8
Cushion RR.	H 1	Stripe	H10
Cylinder head	B 2	Taillight	H 4
Cylinder head cover	B 1	Tools	H 9
Exhaust muffler	G 5	Top bridge	E 7
Fender FR.	E10	Transmission	C10
Fender RR.	H 2	Valve	B 4
Fork FR.	E11	Wheel FR.	F 4
Fork RR.	G11	Wheel RR.	F 8
Frame body	H 6	Winker	H 3
Fuel tank	F10	Wire harness	H 5
Gearshift drum	C12		
Generator	B 8		

Ref. No.	H/C	Part No.	Description	Reqd. No. '83	Serial No. From	Serial No. To	Remarks
55	0886234	91254-463-003	DUST SEAL	2			
56	0874768	91301-469-003	O-RING, 5.8X1.9	1			
•57	1290733	91302-MA3-661	O-RING, 35.5X2	2			
58	1251552	91308-MC7-003	O-RING D, 13.8X2.4	2			
59	1218551	91309-MC7-003	O-RING C, 54.4X3.1	2			
60	1218569	91310-MC7-003	O-RING B, 6.8X1.9	2			
61	1311232	91352-MG5-671	O-RING	4			
62	1311257	91353-MG5-671	O-RING	2			
•63	1374156	91356-MA3-661	O-RING, 29.2X3.5	2			
64	0432195	91456-371-770	CAP, SOCKET BOLT	4			
65	0054155	92000-06008	BOLT, HEX., 6X8	2			
66	0416966	92700-08050-3B	BOLT, STUD, 8X50	4			
•67	1039247	93500-06012-0H	SCREW, PAN, 6X12	2			
68	1213263	93600-04010-1B	SCREW, FLAT, 4X10	4			
69	0114686	94030-08000	NUT, HEX., 8MM	4			
70	0059097	94101-08000	WASHER, PLAIN, 8MM	4			
71	0058982	94111-08000	WASHER, SPRING, 8MM	4			
72	0058917	96211-05000	BALL, STEEL, #5 (5/32)	2			

CB1100F '83 Frame No.; SC110•DM000001 To Subsequent

© HONDA MOTOR CO., LTD. 1983

F 2

Block No.
F-9

Front brake caliper

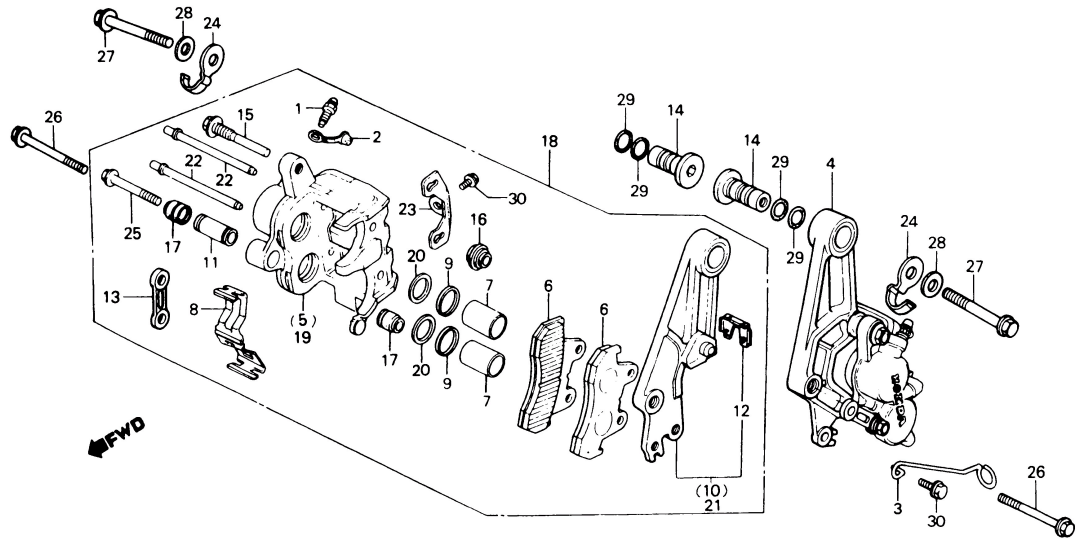

BMG5 – 16

CB1100F '83

Air cleaner	G 3	Handle lever	E 4
Battery	G 2	Handle pipe	E 7
Brake caliper FR.	F 2	Handle switch	E 4
Brake caliper RR.	F 6	Headlight	E 1
Brake master cylinder FR.	E 6	Ignition coil	H 5
Brake master cylinder RR.	F 5	Meter	E 3
Brake pedal	G 7	Oil cooler	H 6
Cable	E 4	Oil filter	C 3
Cam chain	B 6	Oil pan	C 3
Cam chain tensioner	B 6	Oil pump	C 1
Camshaft	B 4	Piston	C 6
Carburetor (Assy. • Link)	D 1	Regulator	F 12
Carburetor (Component parts)	D 2	Seat	F 11
Chain case	G11	Side cover	F 12
Change pedal	G 7	Spark unit	F 12
Clutch	B10	Stand	G10
Crankcase	C 4	Starting motor	B12
Crankcase cover L.	B11	Steering stem	E 9
Crankshaft	C 6	Step	G 8
Cushion RR.	H 1	Stripe	H10
Cylinder head	B 2	Taillight	H 4
Cylinder head cover	B 1	Tools	H 9
Exhaust muffler	G 5	Top bridge	E 7
Fender FR.	E10	Transmission	C10
Fender RR.	H 2	Valve	B 4
Fork FR.	E11	Wheel FR.	F 4
Fork RR.	G11	Wheel RR.	F 8
Frame body	H 6	Winker	H 3
Fuel tank	F10	Wire harness	H 5
Gearshift drum	C12		
Generator	B 8		

Ref. No.	H/C	Part No.	Description	Reqd. No. '83	Serial No. From	Serial No. To	Remarks
1	0505735	43352-568-003	SCREW, BLEEDER	2			
2	0954230	43353-461-771	CAP, BLEEDER	2			
3	1011899	44832-MA3-000	CLAMP, SPEEDOMETER CABLE	1			
4	1306455	45100-MB7-612	CALIPER ASSY., L. FR.	1			
	1306463	45100-MB7-613	CALIPER ASSY., L. FR. (NISSHIN JB)	1			
5	1011915	45101-MA3-006	CALIPER COMP., L.	1			
6	1272459	45105-MC7-007	PAD COMP. (ASK)	4			
	1285311	45105-MC7-014	PAD COMP. (JB)	4			
7	1011949	45107-MA3-006	PISTON	4			
8	1011956	45108-MA3-006	SPRING, PAD	2			
9	1011964	45109-166-006	DUST SEAL	4			
•10	1248186	45110-MB7-611	BRACKET COMP., L. FR.	1			
11	1011980	45111-MA3-006	SLEEVE	2			
12	1095496	45112-445-631	RETAINER, BRACKET	2			
13	1248194	45113-MB7-610	BRIDGE, CALIPER BRACKET	2			
14	1211770	45114-MB7-610	SLEEVE, FR. CALIPER BRACKET	2			
15	1012004	45131-MA3-006	BOLT, PIN	2			
16	1012012	45133-MA3-006	BOOT B	2			
17	1012020	45133-166-016	BOOT, PIN	4			
18	1306505	45200-MB7-612	CALIPER ASSY., R. FR.	1			
	1306513	45200-MB7-613	CALIPER ASSY., R. FR. (NISSHIN JB)	1			
19	1020494	45201-MA3-006	CALIPER COMP., R.	1			
20	1012038	45209-166-006	SEAL, PISTON	4			
•21	1302348	45210-MB7-611	BRACKET COMP., R. FR.	1			
22	1012046	45215-MA3-006	PIN, HANGER	4			
23	1012053	45217-MA3-006	PLATE	2			

CB1100F '83 Frame No.; SC110*DM000001 To Subsequent

© HONDA MOTOR CO., LTD. 1983

F 3

Block No.
F-9

Front brake caliper

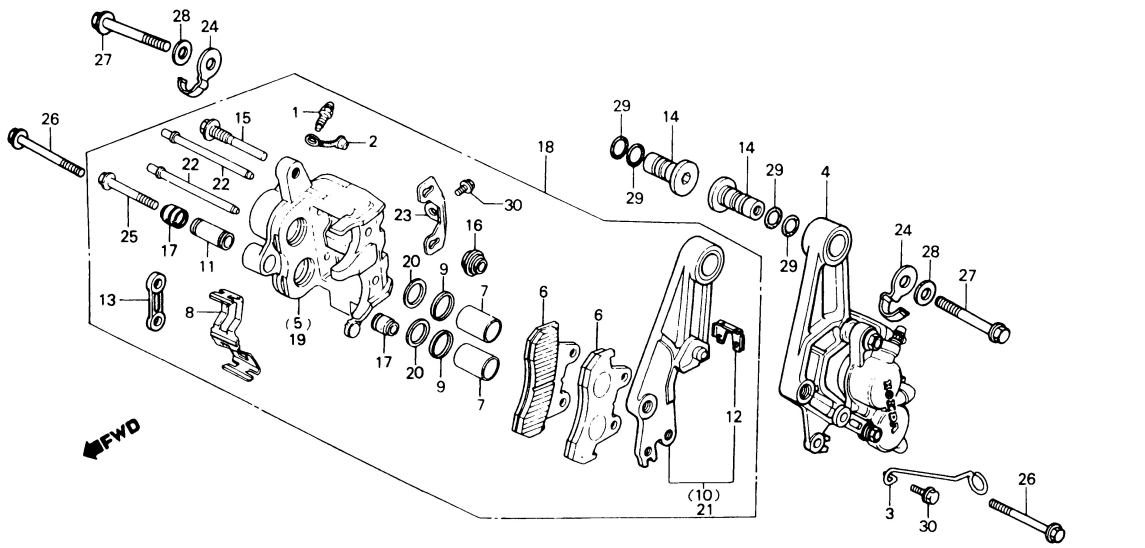

BMG5—16

CB1100F '83

Air cleaner	G 3	Handle lever	E 4
Battery	G 2	Handle pipe	E 7
Brake caliper FR.	F 2	Handle switch	E 4
Brake caliper RR.	F 6	Headlight	E 1
Brake master cylinder FR.	E 6	Ignition coil	H 5
Brake master cylinder RR.	F 5	Meter	E 3
Brake pedal	G 7	Oil cooler	H 6
Cable	E 4	Oil filter	C 3
Cam chain	B 6	Oil pan	C 3
Cam chain tensioner	B 6	Oil pump	C 1
Camshaft	B 4	Piston	C 6
Carburetor (Assy. • Link)	D 1	Regulator	F12
Carburetor (Component parts)	D 2	Seat	F11
Chain case	G11	Side cover	F12
Change pedal	G 7	Spark unit	F12
Clutch	B10	Stand	G10
Crankcase	C 4	Starting motor	B12
Crankcase cover L.	B11	Steering stem	E 9
Crankshaft	C 6	Step	G 8
Cushion RR.	H 1	Stripe	H10
Cylinder head	B 2	Taillight	H 4
Cylinder head cover	B 1	Tools	H 9
Exhaust muffler	G 5	Top bridge	E 7
Fender FR.	E10	Transmission	C10
Fender RR.	H 2	Valve	B 4
Fork FR.	E11	Wheel FR.	F 4
Fork RR.	G11	Wheel RR.	F 8
Frame body	H 6	Winker	H 3
Fuel tank	F10	Wire harness	H 5
Gearshift drum	C12		
Generator	B 8		

Ref. No.	H/C	Part No.	Description	Reqd. No. '83	Serial No. From	To	Remarks
•24	1249960	61102-MB7-610	CLAMP, FR. BRAKE HOSE	2			
25	1053107	90180-MA3-006	BOLT, FLANGE, 8X49	2			
26	1213107	90180-MA3-660	BOLT, FLANGE, 8X55	2			
27	1311059	90185-MB7-610	BOLT, FLANGE, 10X53	2			
28	1311091	90501-MB7-610	WASHER, 10.3X25	2			
29	1218544	91302-MC7-611	O-RING, 16.8X1.9	4			
30	0663930	95700-06010-07	BOLT, FLANGE, 6X10	3			

CB1100F '83 Frame No.; SC110•DM000001 To Subsequent

© HONDA MOTOR CO., LTD. 1983

F 4

Block No.
F-10

Front wheel

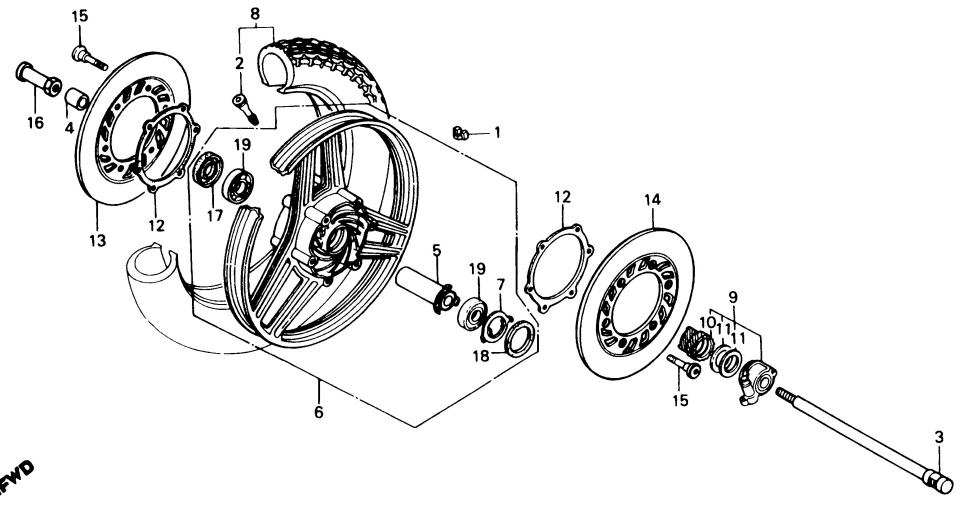

BMG5 – 17

CB1100F '83

Air cleaner	G 3	Handle lever	E 4
Battery	G 2	Handle pipe	E 7
Brake caliper FR.	F 2	Handle switch	E 4
Brake caliper RR.	F 6	Headlight	E 1
Brake master cylinder FR.	E 6	Ignition coil	H 5
Brake master cylinder RR.	F 5	Meter	E 3
Brake pedal	G 7	Oil cooler	H 6
Cable	E 4	Oil filter	C 3
Cam chain	B 6	Oil pan	C 3
Cam chain tensioner	B 6	Oil pump	C 1
Camshaft	B 4	Piston	C 6
Carburetor (Assy. • Link)	D 1	Regulator	F 12
Carburetor (Component parts)	D 2	Seat	F 11
Chain case	G11	Side cover	F 12
Change pedal	G 7	Spark unit	F 12
Clutch	B10	Stand	G10
Crankcase	C 4	Starting motor	B12
Crankcase cover L.	B11	Steering stem	E 9
Crankshaft	C 6	Step	G 8
Cushion RR.	H 1	Stripe	H10
Cylinder head	B 2	Taillight	H 4
Cylinder head cover	B 1	Tools	H 9
Exhaust muffler	G 5	Top bridge	E 7
Fender FR.	E10	Transmission	C10
Fender RR.	H 2	Valve	B 4
Fork FR.	E11	Wheel FR.	F 4
Fork RR.	G11	Wheel RR.	F 8
Frame body	H 6	Winker	H 3
Fuel tank	F 10	Wire harness	H 5
Gearshift drum	C12		
Generator	B 8		

Ref. No.	H/C	Part No.	Description	Reqd. No. '83	Serial No. From	Serial No. To	Remarks
1	1272319	42704-MB0-000	WEIGHT, BALANCE (10G)	N			
	1247881	42705-MB0-000	WEIGHT, BALANCE (20G)	N			
	1247899	42706-MB0-000	WEIGHT, BALANCE (30G)	N			
2	1032465	42753-425-003	VALVE, RIM (BS)	1			
	1041128	42753-425-004	VALVE, RIM (DUNLOP)	1			
3	1306398	44301-MG5-670	AXLE, FR. WHEEL	1			
4	0946343	44311-461-770	COLLAR, FR. WHEEL SIDE	1			
5	1248020	44620-MB0-000	COLLAR COMP., FR. AXLE DISTANCE	1			
• 6	1557982	44650-MB0-315	WHEEL COMP., FR.	1			
7	0482968	44680-410-000	RETAINER, GEAR BOX	1			
8	1306406	44710-MG5-671	TIRE ASSY., FR. (100/90V18 BS)	1			
	1306414	44710-MG5-672	TIRE ASSY., FR. (100/90V18 DUNLOP)	1			
9	1306422	44800-MG5-671	BOX ASSY., SPEEDOMETER GEAR	1			
• 10	1750868	44806-MC1-771	GEAR, SPEEDOMETER (25T)	1			
11	0433896	44809-402-000	WASHER, SPEEDOMETER GEAR	2			
• 12	1390830	45128-ME2-003	SHIM, DAMPING	2			
13	1306521	45251-MG5-670	DISK, R. FR. BRAKE	1			
14	1306539	45351-MG5-670	DISK, L. FR. BRAKE	1			
• 15	1390848	90105-ME2-000	BOLT, FR. DISK, 8X59	12			
16	0297424	90305-333-000	NUT, AXLE, 12MM	1			
17	1210913	91252-MC7-003	DUST SEAL, 22X42X7	1			
18	0912402	91258-410-006	DUST SEAL, 40X50X5 (NIPPON)	1			
	0670992	91258-410-013	DUST SEAL, 40X50X5 (ARAI)	1			
19	1213347	96150-63020-10	BEARING, RADIAL BALL, 6302UU	2			

CB1100F '83 Frame No.; SC110*DM000001 To Subsequent

• "N" IN THE REQD. NO. COLUMN INDICATES "AS REQUIRED QUANTITY".

© HONDA MOTOR CO., LTD. 1983

F 5

Block No.
F-11

Rear brake master cylinder

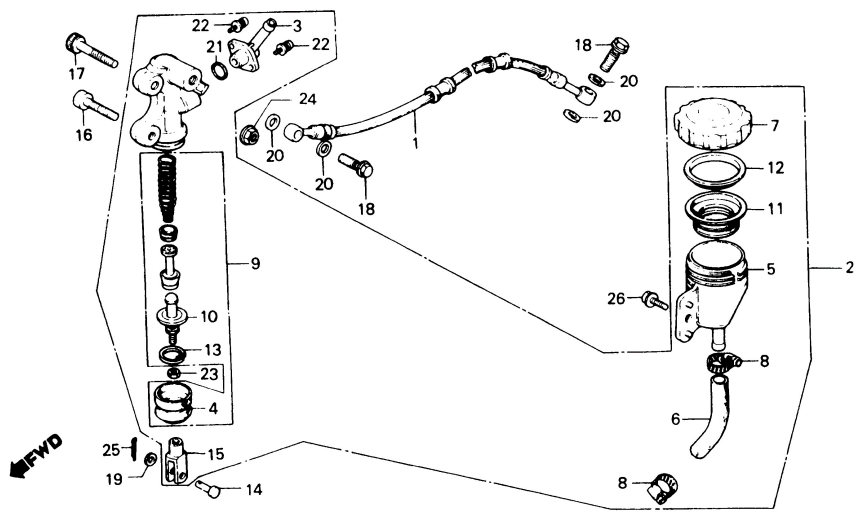

B438-89

CB1100F '83

Air cleaner	G 3	Handle lever	E 4
Battery	G 2	Handle pipe	E 7
Brake caliper FR.	F 2	Handle switch	E 4
Brake caliper RR.	F 6	Headlight	E 1
Brake master cylinder FR.	E 6	Ignition coil	H 5
Brake master cylinder RR.	F 5	Meter	E 3
Brake pedal	G 7	Oil cooler	H 6
Cable	E 4	Oil filter	C 3
Cam chain	B 6	Oil pan	C 3
Cam chain tensioner	B 6	Oil pump	C 1
Camshaft	B 4	Piston	C 6
Carburetor (Assy. • Link)	D 1	Regulator	F12
Carburetor (Component parts)	D 2	Seat	F11
Chain case	G11	Side cover	F12
Change pedal	G 7	Spark unit	F12
Clutch	B10	Stand	G10
Crankcase	C 4	Starting motor	B12
Crankcase cover L.	B11	Steering stem	E 9
Crankshaft	C 6	Step	G 8
Cushion RR.	H 1	Stripe	H10
Cylinder head	B 2	Taillight	H 4
Cylinder head cover	B 1	Tools	H 9
Exhaust muffler	G 5	Top bridge	E 7
Fender FR.	E10	Transmission	C10
Fender RR.	H 2	Valve	B 4
Fork FR.	E11	Wheel FR.	F 4
Fork RR.	G11	Wheel RR.	F 8
Frame body	H 6	Winker	H 3
Fuel tank	F10	Wire harness	H 5
Gearshift drum	C12		
Generator	B 8		

Ref. No.	H/C	Part No.	Description	Reqd. No. '83	Serial No. From	To	Remarks
1	1306349	43310-MG5-671	HOSE, RR. BRAKE	1			
2	1306372	43500-MG5-671	CYLINDER ASSY., RR. MASTER	1			
3	0693408	43503-422-006	CONNECTOR, MASTER CYLINDER	1			
4	0707331	43504-371-013	BOOT, MASTER CYLINDER	1			
5	0910471	43511-461-006	CUP, MASTER CYLINDER OIL	1			
6	1306380	43512-MG5-671	HOSE, MASTER CYLINDER OIL	1			
7	0946731	43513-461-771	CAP, OIL CUP	1			
8	0817593	43514-445-771	CLAMP, MASTER CYLINDER OIL	2			
				HOSE			
9	0946749	43520-461-771	CYLINDER SET, MASTER	1			
10	0954248	43530-461-771	ROD COMP., PUSH	1			
11	0194480	45520-300-000	DIAPHRAGM	1			
12	0200733	45521-300-010	PLATE, DIAPHRAGM	1			
13	0506139	46182-500-013	CIRCLIP	1			
14	0407502	46503-371-000	PIN, BRAKE ROD	1			
15	0817684	46504-445-771	JOINT, BRAKE ROD	1			
16	0765578	90105-438-000	BOLT, SOCKET, 8X38	1			
17	0765586	90106-438-000	BOLT, SOCKET, 8X48	1			
18	1310994	90145-KE8-000	BOLT, OIL, 10X22	2			
19	0113654	90501-310-000	WASHER, 7X12	1			
20	0189902	90545-300-000	WASHER, OIL BOLT	4			
21	0693481	91212-422-006	O-RING, 14.8X2.4	1			
22	0954412	93893-04012-18	SCREW-WASHER, 4X12	2			
23	0156075	94002-08000-0S	NUT, HEX., 8MM	1			
24	0481143	94050-08000	NUT, FLANGE, 8MM	1			
25	0058313	94201-16150	PIN, SPLIT, 1.6X15	1			
26	0496653	95700-06016-00	BOLT, FLANGE, 6X16	1			

CB1100F '83 Frame No.; SC110*DM000001 To Subsequent

© HONDA MOTOR CO., LTD. 1983

F 6

Block No.
F-12

Rear brake caliper

CB1100F '83

Air cleaner	G 3	Handle lever	E 4
Battery	G 2	Handle pipe	E 7
Brake caliper FR.	F 2	Handle switch	E 4
Brake caliper RR.	F 6	Headlight	E 1
Brake master cylinder FR.	E 6	Ignition coil	H 5
Brake master cylinder RR.	F 5	Meter	E 3
Brake pedal	G 7	Oil cooler	H 6
Cable	E 4	Oil filter	C 3
Cam chain	B 6	Oil pan	C 3
Cam chain tensioner	B 6	Oil pump	C 1
Camshaft	B 4	Piston	C 6
Carburetor (Assy. • Link)	D 1	Regulator	F12
Carburetor (Component parts)	D 2	Seat	F11
Chain case	G11	Side cover	F12
Change pedal	G 7	Spark unit	F12
Clutch	B10	Stand	G10
Crankcase	C 4	Starting motor	B12
Crankcase cover L.	B11	Steering stem	E 9
Crankshaft	C 6	Step	G 8
Cushion RR.	H 1	Stripe	H10
Cylinder head	B 2	Taillight	H 4
Cylinder head cover	B 1	Tools	H 9
Exhaust muffler	G 5	Top bridge	E 7
Fender FR.	E10	Transmission	C10
Fender RR.	H 2	Valve	B 4
Fork FR.	E11	Wheel FR.	F 4
Fork RR.	G11	Wheel RR.	F 8
Frame body	H 6	Winker	H 3
Fuel tank	F10	Wire harness	H 5
Gearshift drum	C12		
Generator	B 8		

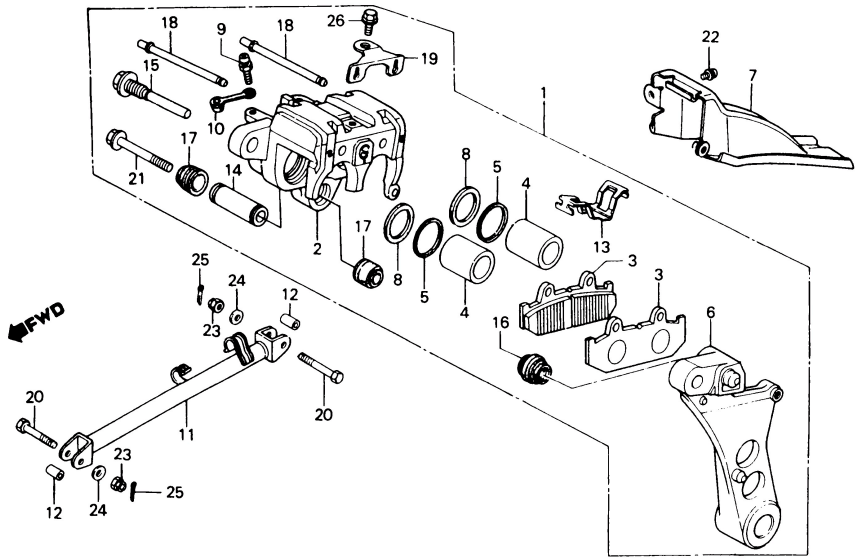

Ref. No.	H/C	Part No.	Description	Reqd. No. '83	Serial No. From	To	Remarks
1	1306315	43100-MG5-671	CALIPER ASSY., RR.	1			
			(NISSHIN JB)				
	1306323	43100-MG5-672	CALIPER ASSY., RR.	1			
			(NISSHIN ASK)				
2	1020312	43101-MA3-006	CALIPER COMP., RR.	1			
3	1288927	43105-MC7-007	PAD COMP., RR.	2			
	1268564	43105-MC7-014	PAD COMP., RR. (JB)	2			
4	1020346	43107-MA3-006	PISTON	2			
5	1020353	43109-MA3-006	DUST SEAL	2			
6	1306331	43110-MG5-671	BRACKET COMP., RR.	1			
7	1020379	43140-MA3-000	COVER COMP., RR. DISK	1			
8	1020387	43209-MA3-006	SEAL, PISTON	2			
9	0505735	43352-568-003	SCREW, BLEEDER	1			
10	0954230	43353-461-771	CAP, BLEEDER	1			
11	1306364	43431-425-700	LINK COMP., TORQUE	1			
12	0415158	43435-392-000	COLLAR, LINK	2			
13	1011956	45108-MA3-006	SPRING, PAD	1			
14	1011980	45111-MA3-006	SLEEVE	1			
15	1012004	45131-MA3-006	BOLT, PIN	1			
16	1012012	45133-MA3-006	BOOT B	1			
17	1012020	45133-166-016	BOOT, PIN	2			
18	1012046	45215-MA3-006	PIN, HANGER	2			
19	1012053	45217-MA3-006	PLATE	1			
20	0415869	90124-392-000	BOLT, RR. BRAKE STOPPER ARM	2			
21	1053107	90180-MA3-006	BOLT, FLANGE, 8X49	1			
22	0771360	93892-05010-07	SCREW-WASHER, 5X10	1			
23	0251678	94011-08000-0S	NUT, CASTLE, 8MM	2			
24	0059097	94101-08000	WASHER, PLAIN, 8MM	2			

CB1100F '83 Frame No.; SC110*DM000001 To Subsequent

© HONDA MOTOR CO., LTD. 1983

F 7

Block No.
F-12

Rear brake caliper

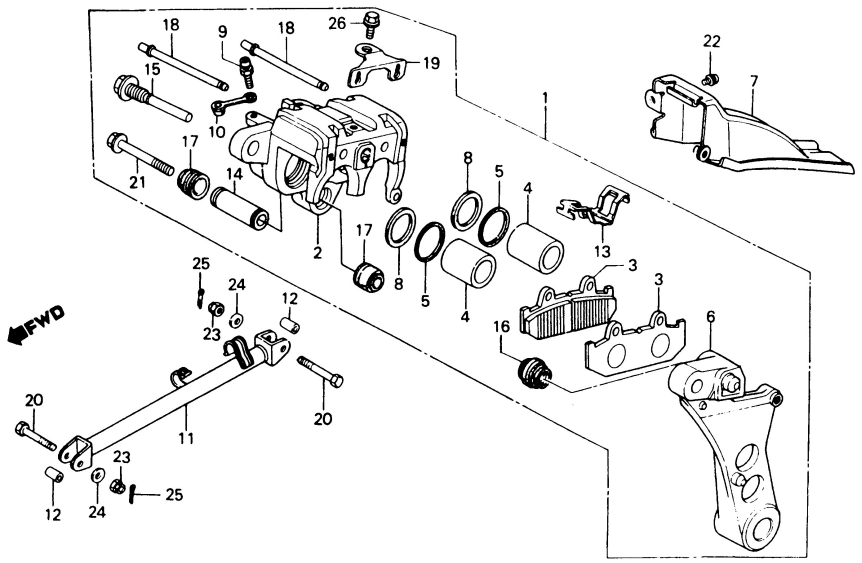

B438 – 90

CB1100F '83

Air cleaner	G 3	Handle lever	E 4
Battery	G 2	Handle pipe	E 7
Brake caliper FR.	F 2	Handle switch	E 4
Brake caliper RR.	F 6	Headlight	E 1
Brake master cylinder FR.	E 6	Ignition coil	H 5
Brake master cylinder RR.	F 5	Meter	E 3
Brake pedal	G 7	Oil cooler	H 6
Cable	E 4	Oil filter	C 3
Cam chain	B 6	Oil pan	C 3
Cam chain tensioner	B 6	Oil pump	C 1
Camshaft	B 4	Piston	C 6
Carburetor (Assy. • Link)	D 1	Regulator	F 12
Carburetor (Component parts)	D 2	Seat	F 11
Chain case	G11	Side cover	F 12
Change pedal	G 7	Spark unit	F 12
Clutch	B10	Stand	G10
Crankcase	C 4	Starting motor	B12
Crankcase cover L.	B11	Steering stem	E 9
Crankshaft	C 6	Step	G 8
Cushion RR.	H 1	Stripe	H10
Cylinder head	B 2	Taillight	H 4
Cylinder head cover	B 1	Tools	H 9
Exhaust muffler	G 5	Top bridge	E 7
Fender FR.	E 10	Transmission	C10
Fender RR.	H 2	Valve	B 4
Fork FR.	E 11	Wheel FR.	F 4
Fork RR.	G11	Wheel RR.	F 8
Frame body	H 6	Winker	H 3
Fuel tank	F 10	Wire harness	H 5
Gearshift drum	C12		
Generator	B 8		

Ref. No.	H/C	Part No.	Description	Reqd. No. '83	Serial No. From	To	Remarks
25	0219279	94201-20180	PIN, SPLIT, 2.0X18	2			
26	0663930	95700-06010-07	BOLT, FLANGE, 6X10	1			

CB1100F '83 Frame No.; SC110*DM000001 To Subsequent

© HONDA MOTOR CO., LTD. 1983

F 8

Block No.
F-13

Rear wheel

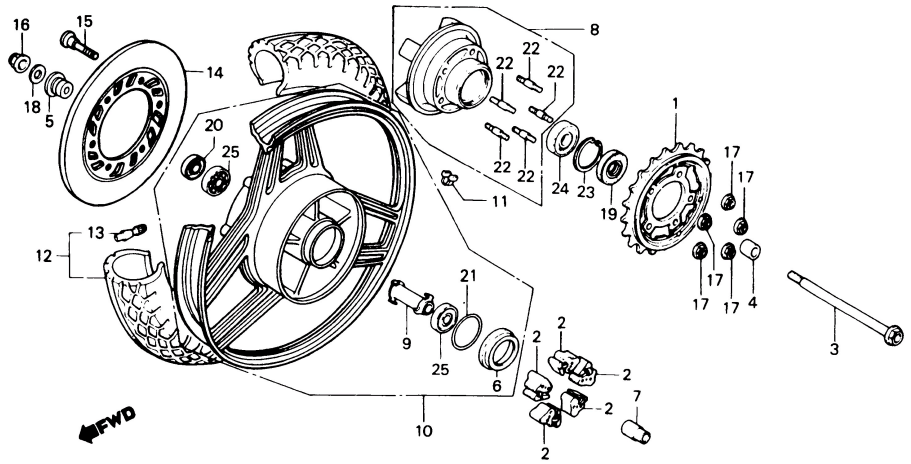

BMG5-18

CB1100F '83

Air cleaner	G 3	Handle lever	E 4
Battery	G 2	Handle pipe	E 7
Brake caliper FR.	F 2	Handle switch	E 4
Brake caliper RR.	F 6	Headlight	E 1
Brake master cylinder FR.	E 6	Ignition coil	H 5
Brake master cylinder RR.	F 5	Meter	E 3
Brake pedal	G 7	Oil cooler	H 6
Cable	E 4	Oil filter	C 3
Cam chain	B 6	Oil pan	C 3
Cam chain tensioner	B 6	Oil pump	C 1
Camshaft	B 4	Piston	C 6
Carburetor (Assy. • Link)	D 1	Regulator	F 12
Carburetor (Component parts)	D 2	Seat	F 11
Chain case	G 11	Side cover	F 12
Change pedal	G 7	Spark unit	F 12
Clutch	B 10	Stand	G 10
Crankcase	C 4	Starting motor	B 12
Crankcase cover L.	B 11	Steering stem	E 9
Crankshaft	C 6	Step	G 8
Cushion RR.	H 1	Stripe	H 10
Cylinder head	B 2	Taillight	H 4
Cylinder head cover	B 1	Tools	H 9
Exhaust muffler	G 5	Top bridge	E 7
Fender FR.	E 10	Transmission	C 10
Fender RR.	H 2	Valve	B 4
Fork FR.	E 11	Wheel FR.	F 4
Fork RR.	G 11	Wheel RR.	F 8
Frame body	H 6	Winker	H 3
Fuel tank	F 10	Wire harness	H 5
Gearshift drum	C 12		
Generator	B 8		

Ref. No.	H/C	Part No.	Description	Reqd. No. '83	Serial No. From	Serial No. To	Remarks
1	1306240	41200-MG5-670	SPROCKET COMP., FINAL DRIVEN (42T)	1			
2	0693598	41241-422-000	DAMPER, RR. WHEEL	5			
3	1306257	42301-MG5-670	AXLE, RR. WHEEL	1			
4	1306265	42311-MG5-670	COLLAR, RR. WHEEL SIDE	1			
5	0693622	42313-422-000	COLLAR, RR. BRAKE PANEL SIDE	1			
6	1020239	42604-438-710	SLEEVE, RR. WHEEL HUB	1			
7	0445742	42605-393-000	SLEEVE, RR. AXLE	1			
8	1306273	42610-MG5-670	FLANGE COMP., FINAL DRIVEN	1			
9	0693648	42620-422-010	COLLAR, RR. AXLE DISTANCE	1			
10	1306281	42650-MG5-670	WHEEL COMP., RR.	1			
11	1247881	42705-MB0-000	WEIGHT, BALANCE (20G)	N			
	1247899	42706-MB0-000	WEIGHT, BALANCE (30G)	N			
	1272319	42704-MB0-000	WEIGHT, BALANCE (10G)	N			
12	1306299	42710-MG5-671	TIRE ASSY., RR. (130/90V17 BS)	1			
	1306307	42710-MG5-672	TIRE ASSY., RR. (130/90 V17 DUNLOP)	1			
13	1032465	42753-425-003	VALVE, RIM (BS)	1			
	1041128	42753-425-004	VALVE, RIM (DUNLOP)	1			
14	1306356	43351-MG5-670	DISK, RR. BRAKE	1			
15	1250901	90105-MB0-000	BOLT, FR. DISK, 8X33	6			
16	1028307	90305-KA4-003	NUT, AXLE, 18MM	1			
17	0384461	90309-375-003	NUT, FLANGE, 12MM	5			
18	1311174	90501-MG5-670	WASHER, PLAIN, 18MM	1			
19	1311190	90753-MG5-670	OIL SEAL, 34X62.2X7	1			
20	0827337	91253-442-003	DUST SEAL, 30X52X7	1			
21	1020726	91258-438-711	D-RING, 66X3.6	1			
22	0693705	92716-12055-0E	BOLT, STUD, 12X55	5			

* "N" IN THE REQD. NO. COLUMN INDICATES "AS REQUIRED QUANTITY".

CB1100F '83 Frame No.; SC110*DM000001 To Subsequent

© HONDA MOTOR CO., LTD. 1983

F 9

Block No.
F-13

Rear wheel

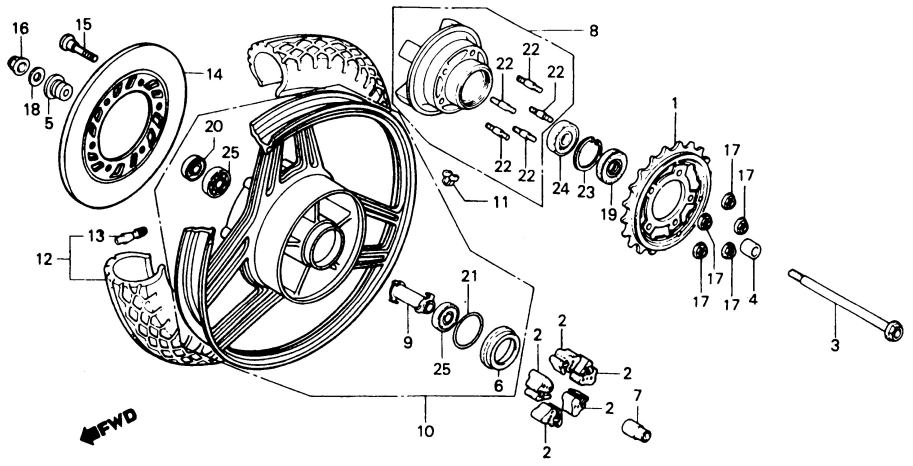

BMG5 – 18

CB1100F '83

Air cleaner	G 3	Handle lever	E 4
Battery	G 2	Handle pipe	E 7
Brake caliper FR.	F 2	Handle switch	E 4
Brake caliper RR.	F 6	Headlight	E 1
Brake master cylinder FR.	E 6	Ignition coil	H 5
Brake master cylinder RR.	F 5	Meter	E 3
Brake pedal	G 7	Oil cooler	H 6
Cable	E 4	Oil filter	C 3
Cam chain	B 6	Oil pan	C 3
Cam chain tensioner	B 6	Oil pump	C 1
Camshaft	B 4	Piston	C 6
Carburetor (Assy. • Link)	D 1	Regulator	F 12
Carburetor (Component parts)	D 2	Seat	F 11
Chain case	G11	Side cover	F 12
Change pedal	G 7	Spark unit	F 12
Clutch	B10	Stand	G10
Crankcase	C 4	Starting motor	B 12
Crankcase cover L.	B11	Steering stem	E 9
Crankshaft	C 6	Step	G 8
Cushion RR.	H 1	Stripe	H10
Cylinder head	B 2	Taillight	H 4
Cylinder head cover	B 1	Tools	H 9
Exhaust muffler	G 5	Top bridge	E 7
Fender FR.	E 10	Transmission	C10
Fender RR.	H 2	Valve	B 4
Fork FR.	E 11	Wheel FR.	F 4
Fork RR.	G11	Wheel RR.	F 8
Frame body	H 6	Winker	H 3
Fuel tank	F 10	Wire harness	H 5
Gearshift drum	C12		
Generator	B 8		

Ref. No.	H/C	Part No.	Description	Reqd. No. '83	Serial No. From	Serial No. To	Remarks
23	0906594	94520-62000	CIRCLIP, INTERNAL, 62	1			
24	0257808	96140-63050-10	BEARING, RADIAL BALL, 6305U	1			
25	0486068	96150-63040-10	BEARING, RADIAL BALL, 6304UU	2			

CB1100F '83 Frame No.; SC110•DM000001 To Subsequent

© HONDA MOTOR CO., LTD. 1983

F 10

Block No.
F-14

Fuel tank

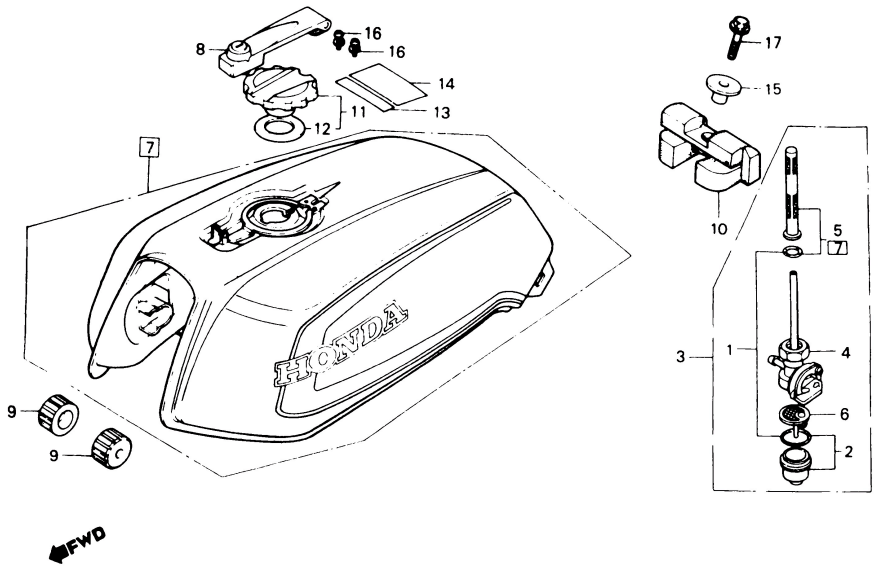

BMG5-19

CB1100F '83

Air cleaner	G 3	Handle lever	E 4
Battery	G 2	Handle pipe	E 7
Brake caliper FR.	F 2	Handle switch	E 4
Brake caliper RR.	F 6	Headlight	E 1
Brake master cylinder FR.	E 6	Ignition coil	H 5
Brake master cylinder RR.	F 5	Meter	E 3
Brake pedal	G 7	Oil cooler	H 6
Cable	E 4	Oil filter	C 3
Cam chain	B 6	Oil pan	C 3
Cam chain tensioner	B 6	Oil pump	C 1
Camshaft	B 4	Piston	C 6
Carburetor (Assy. • Link)	D 1	Regulator	F 12
Carburetor (Component parts)	D 2	Seat	F 11
Chain case	G11	Side cover	F 12
Change pedal	G 7	Spark unit	F 12
Clutch	B10	Stand	G10
Crankcase	C 4	Starting motor	B12
Crankcase cover L.	B11	Steering stem	E 9
Crankshaft	C 6	Step	G 8
Cushion RR.	H 1	Stripe	H10
Cylinder head	B 2	Taillight	H 4
Cylinder head cover	B 1	Tools	H 9
Exhaust muffler	G 5	Top bridge	E 7
Fender FR.	E10	Transmission	C10
Fender RR.	H 2	Valve	B 4
Fork FR.	E11	Wheel FR.	F 4
Fork RR.	G11	Wheel RR.	F 8
Frame body	H 6	Winker	H 3
Fuel tank	F10	Wire harness	H 5
Gearshift drum	C12		
Generator	B 8		

Ref. No.	H/C	Part No.	Description	Reqd. No. '83	Serial No. From	To	Remarks
1	1076421	16080-461-751	O-RING	1			
2	1076439	16081-471-831	CUP, FUEL STRAINER	1			
3	1076470	16950-461-751	COCK ASSY., FUEL	1			
4	1076488	16951-461-751	BODY COMP., FUEL COCK	1			
5	1076504	16952-461-751	SCREEN, FUEL STRAINER	1			
6	1076512	16959-461-751	CUP, FILTER	1			
[7]	1305358	175A1-MG5-670ZA	TANK SET, FUEL *R-125C-A* (PEARL MAUI RED)	1			
	1305366	175A1-MG5-670ZB	TANK SET, FUEL *PB-126C-A* (KAPIOLANI BLUE)	1			
8	0874933	17530-422-017	LID COMP., FUEL TANK	1			
9	0742940	17611-425-000	CUSHION, FUEL TANK FR.	2			
10	1092352	17613-MB7-670	CUSHION, FUEL TANK RR.	1			
11	0874966	17620-469-000	CAP COMP., FUEL FILLER	1			
12	0874974	17632-469-000	PACKING, FUEL FILLER CAP	1			
13	1310903	87517-MG5-670ZA	LABEL, FR. FORK CAUTION *A-03* (SILVER)	1			
•14	1503374	87560-MB0-670ZA	MARK, DRIVE CAUTION *A-03* (SILVER)	1			
15	1057298	90324-MA1-000	COLLAR, FUEL TANK MOUNTING	1			
16	0475046	93892-04006-00	SCREW-WASHER, 4X6	2			
17	0671214	95700-08025-00	BOLT, FLANGE, 8X25	1			

CB1100F '83 Frame No.; SC110*DM000001 To Subsequent

© HONDA MOTOR CO., LTD. 1983

* PARTS OF WHICH THE REF. NO. IS FRAMED "□" ARE AVAILABLE AS A SET.

F 11

Block No.
F-15

Seat

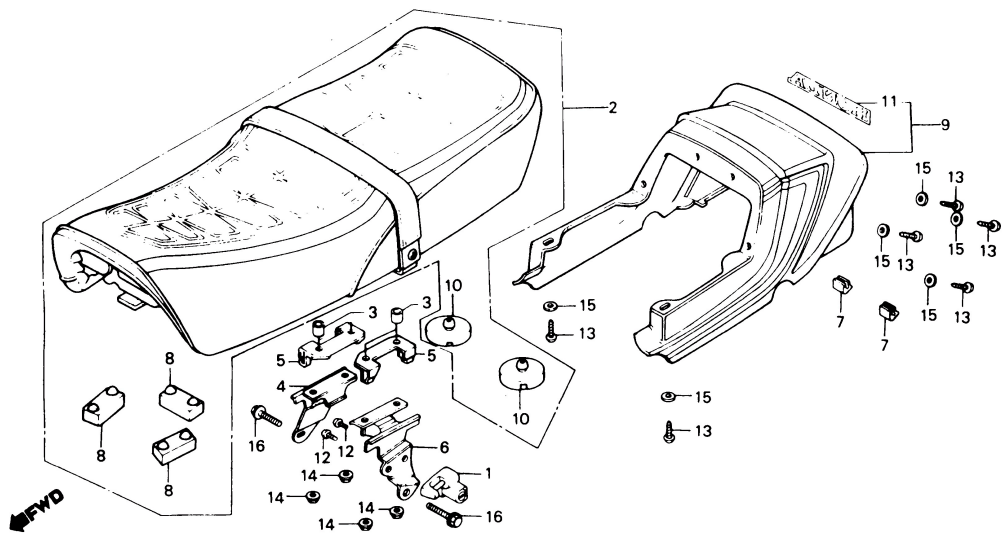

BMG5–20

CB1100F '83

Air cleaner	G 3	Handle lever	E 4
Battery	G 2	Handle pipe	E 7
Brake caliper FR.	F 2	Handle switch	E 4
Brake caliper RR.	F 6	Headlight	E 1
Brake master cylinder FR.	E 6	Ignition coil	H 5
Brake master cylinder RR.	F 5	Meter	E 3
Brake pedal	G 7	Oil cooler	H 6
Cable	E 4	Oil filter	C 3
Cam chain	B 6	Oil pan	C 3
Cam chain tensioner	B 6	Oil pump	C 1
Camshaft	B 4	Piston	C 6
Carburetor (Assy. • Link)	D 1	Regulator	F 12
Carburetor (Component parts)	D 2	Seat	F 11
Chain case	G11	Side cover	F 12
Change pedal	G 7	Spark unit	F 12
Clutch	B10	Stand	G10
Crankcase	C 4	Starting motor	B12
Crankcase cover L.	B11	Steering stem	E 9
Crankshaft	C 6	Step	G 8
Cushion RR.	H 1	Stripe	H10
Cylinder head	B 2	Taillight	H 4
Cylinder head cover	B 1	Tools	H 9
Exhaust muffler	G 5	Top bridge	E 7
Fender FR.	E10	Transmission	C10
Fender RR.	H 2	Valve	B 4
Fork FR.	E11	Wheel FR.	F 4
Fork RR.	G11	Wheel RR.	F 8
Frame body	H 6	Winker	H 3
Fuel tank	F 10	Wire harness	H 5
Gearshift drum	C12		
Generator	B 8		

Ref. No.	H/C	Part No.	Description	Reqd. No. '83	Serial No. From	Serial No. To	Remarks
1	0346726	50710-371-007	HOLDER ASSY., HELMET	1			
2	1307206	77100-445-841	SEAT COMP.	1			
3	0765404	77121-438-000	COLLAR, SEAT RR. STAY	4			
4	0765412	77130-438-000	STAY, R. SEAT RR.	1			
5	0765420	77131-438-000	PLATE, SEAT STOPPER	2			
6	0765438	77140-438-000	STAY, L. SEAT RR.	1			
7	0765446	77203-438-000	RUBBER, RR. COWL STOPPER	2			
8	0154807	77205-286-000	RUBBER B, SEAT SETTING	3			
9	1307214	77210-MG5-670ZA	COWL ASSY., RR. *R-125C-A* (PEARL MAUI RED)	1			
	1307222	77210-MG5-670ZB	COWL ASSY., RR. *PB-126C-A* (KAPIOLANI BLUE)	1			
10	0765453	77211-438-000	RUBBER, SEAT STOPPER	2			
11	0808824	87127-438-300	MARK, RR. COWL (A.M.)	1			
12	0769109	93892-06010-00	SCREW-WASHER, 6X10	2			
13	1020734	93901-25020	SCREW, TAPPING, 5X8	6			
14	0471623	94050-06000	NUT, FLANGE, 6MM	4			
15	0285791	94101-05800	WASHER, PLAIN, 5MM	6			
16	0631242	95700-08016-00	BOLT, FLANGE, 8X16	2			

CB1100F '83 Frame No.; SC110*DM000001 To Subsequent

© HONDA MOTOR CO., LTD. 1983

F 12

Block No.
F-16

Side cover • Spark unit • Regulator

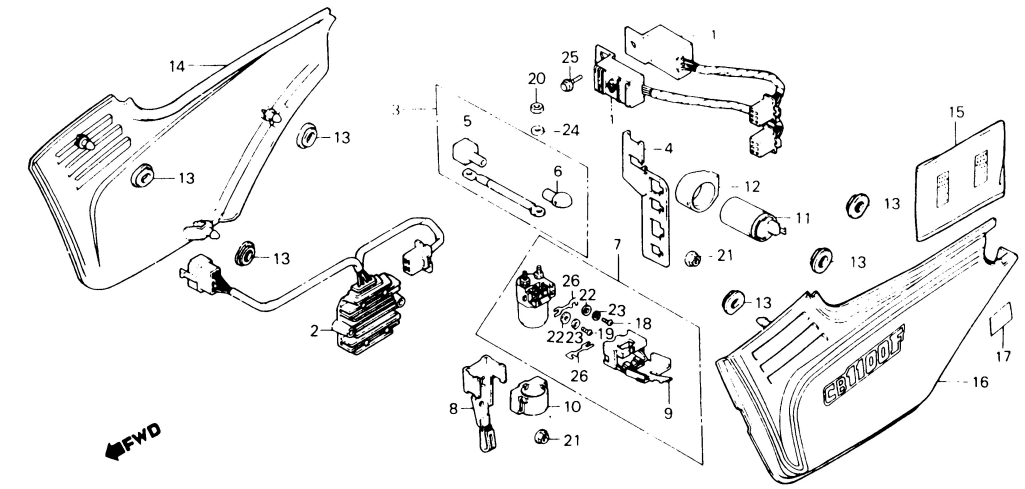

BMG5 - 21

CB1100F '83

Air cleaner	G 3	Handle lever	E 4
Battery	G 2	Handle pipe	E 7
Brake caliper FR.	F 2	Handle switch	E 4
Brake caliper RR.	F 6	Headlight	E 1
Brake master cylinder FR.	E 6	Ignition coil	H 5
Brake master cylinder RR.	F 5	Meter	E 3
Brake pedal	G 7	Oil cooler	H 6
Cable	E 4	Oil filter	C 3
Cam chain	B 6	Oil pan	C 3
Cam chain tensioner	B 6	Oil pump	C 1
Camshaft	B 4	Piston	C 6
Carburetor (Assy. • Link)	D 1	Regulator	F 12
Carburetor (Component parts)	D 2	Seat	F 11
Chain case	G11	Side cover	F 12
Change pedal	G 7	Spark unit	F 12
Clutch	B10	Stand	G10
Crankcase	C 4	Starting motor	B12
Crankcase cover L.	B11	Steering stem	E 9
Crankshaft	C 6	Step	G 8
Cushion RR.	H 1	Stripe	H10
Cylinder head	B 2	Taillight	H 4
Cylinder head cover	B 1	Tools	H 9
Exhaust muffler	G 5	Top bridge	E 7
Fender FR.	E10	Transmission	C10
Fender RR.	H 2	Valve	B 4
Fork FR.	E11	Wheel FR.	F 4
Fork RR.	G11	Wheel RR.	F 8
Frame body	H 6	Winker	H 3
Fuel tank	F10	Wire harness	H 5
Gearshift drum	C12		
Generator	B 8		

CB1100F '83 Frame No.; SC110*DM000001 To Subsequent

Ref. No.	H/C	Part No.	Description	Reqd. No. '83	Serial No. From	To	Remarks
1	1051903	30400-MA4-601	SPARK UNIT (OKI)	2			
	0910216	30400-461-155	SPARK UNIT (NEC)	2			
2	1305846	31600-MG5-000	RECTIFIER ASSY., REGULATE	1			
3	0947630	32401-425-010	CABLE, STARTER BATTERY	1			
4	0717959	32412-425-000	HOLDER, COUPLER	1			
5	0717967	32414-425-000	COVER B, TERMINAL	1			
6	0717975	32415-425-000	COVER A, MAGNETIC SWITCH	1			
• 7	1246958	35850-MB0-007	SWITCH ASSY., STARTER MAGNETIC	1			
8	1306091	35851-MA3-660	STAY, STARTER MAGNETIC SWITCH	1			
• 9	1246966	35852-MB0-007	COVER, FUSE	1			
•10	1246974	35856-MB0-007	RUBBER, SHOCK	1			
11	1247337	38301-MB0-004	RELAY COMP., WINKER (MITSUBA)	1			
12	0765974	38306-438-000	SUSPENSION, WINKER RELAY	1			
13	0204990	83551-300-000	GROMMET, AIR CLEANER CASE	6			
14	1307263	83630-MG5-670ZA	COVER ASSY., R. SIDE *R-125C-A* (PEARL MAUI RED)	1			
	1307271	83630-MG5-670ZB	COVER ASSY., R. SIDE *PB-126C-A* (KAPIOLANI BLUE)	1			
15	0326116	83642-355-000	BAG, OWNERS MANUAL	1			
16	1307297	83730-MG5-670ZA	COVER ASSY., L. SIDE *R-125C-A* (PEARL MAUI RED)	1			
	1307305	83730-MG5-670ZB	COVER ASSY., L. SIDE *PB-126C-A* (KAPIOLANI BLUE)	1			
17	0274811	87511-323-670	LABEL, HELMET HOLDER	1			
18	0753962	93500-04006-1H	SCREW, PAN, 4X6	1			

© HONDA MOTOR CO., LTD. 1983

G 1

Block No.
F-16

Side cover • Spark unit • Regulator

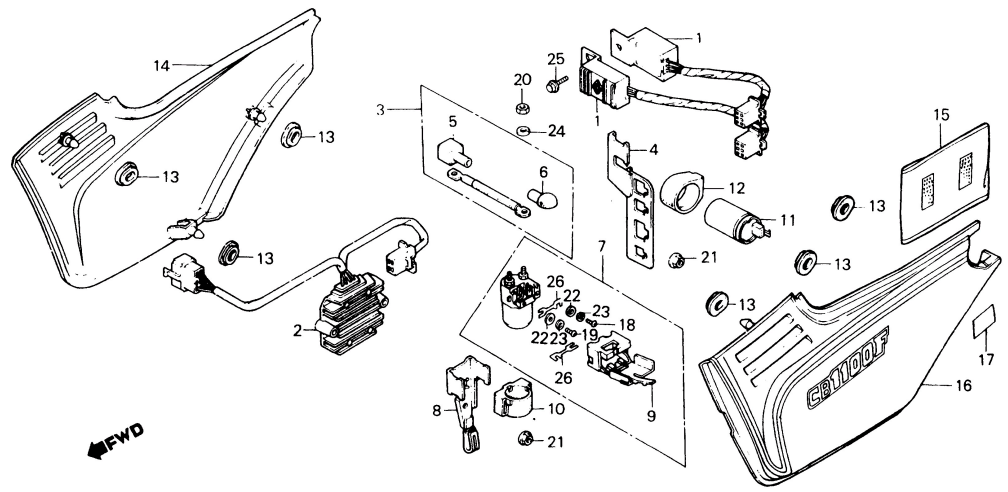

BMG5—21

CB1100F '83

Air cleaner	G 3	Handle lever	E 4
Battery	G 2	Handle pipe	E 7
Brake caliper FR.	F 2	Handle switch	E 4
Brake caliper RR.	F 6	Headlight	E 1
Brake master cylinder FR.	E 6	Ignition coil	H 5
Brake master cylinder RR.	F 5	Meter	E 3
Brake pedal	G 7	Oil cooler	H 6
Cable	E 4	Oil filter	C 3
Cam chain	B 6	Oil pan	C 3
Cam chain tensioner	B 6	Oil pump	C 1
Camshaft	B 4	Piston	C 6
Carburetor (Assy. • Link)	D 1	Regulator	F 12
Carburetor (Component parts)	D 2	Seat	F 11
Chain case	G11	Side cover	F 12
Change pedal	G 7	Spark unit	F 12
Clutch	B10	Stand	G10
Crankcase	C 4	Starting motor	B12
Crankcase cover L.	B11	Steering stem	E 9
Crankshaft	C 6	Step	G 8
Cushion RR.	H 1	Stripe	H10
Cylinder head	B 2	Taillight	H 4
Cylinder head cover	B 1	Tools	H 9
Exhaust muffler	G 5	Top bridge	E 7
Fender FR.	E 10	Transmission	C10
Fender RR.	H 2	Valve	B 4
Fork FR.	E 11	Wheel FR.	F 4
Fork RR.	G11	Wheel RR.	F 8
Frame body	H 6	Winker	H 3
Fuel tank	F 10	Wire harness	H 5
Gearshift drum	C12		
Generator	B 8		

Ref. No.	H/C	Part No.	Description	Reqd. No. '83	Serial No. From	To	Remarks
19	0753970	93500-04010-1H	SCREW, PAN, 4X10	1			
20	0058081	94002-06000	NUT, HEX., 6MM	2			
21	0471623	94050-06000	NUT, FLANGE, 6MM	2			
22	0331462	94101-04800	WASHER, PLAIN, 4MM	2			
23	0346114	94111-04800	WASHER, SPRING, 4MM	2			
24	0058974	94111-06000	WASHER, SPRING, 6MM	2			
25	0487025	95700-06012-00	BOLT, FLANGE, 6X12	1			
26	0412676	98200-53000	FUSE F (30A)	2			

CB1100F '83 Frame No.; SC110*DM000001 To Subsequent

© HONDA MOTOR CO., LTD. 1983

Block No.
F-17

Battery

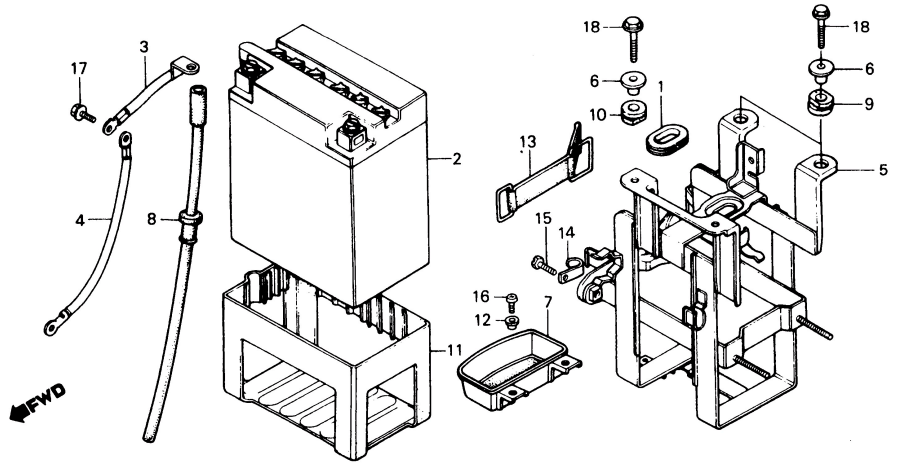

BMG5-22

CB1100F '83

Air cleaner	G 3	Handle lever	E 4
Battery	G 2	Handle pipe	E 7
Brake caliper FR.	F 2	Handle switch	E 4
Brake caliper RR.	F 6	Headlight	E 1
Brake master cylinder FR.	E 6	Ignition coil	H 5
Brake master cylinder RR.	F 5	Meter	E 3
Brake pedal	G 7	Oil cooler	H 6
Cable	E 4	Oil filter	C 3
Cam chain	B 6	Oil pan	C 3
Cam chain tensioner	B 6	Oil pump	C 1
Camshaft	B 4	Piston	C 6
Carburetor (Assy. • Link)	D 1	Regulator	F 12
Carburetor (Component parts)	D 2	Seat	F 11
Chain case	G11	Side cover	F 12
Change pedal	G 7	Spark unit	F 12
Clutch	B10	Stand	G10
Crankcase	C 4	Starting motor	B12
Crankcase cover L.	B11	Steering stem	E 9
Crankshaft	C 6	Step	G 8
Cushion RR.	H 1	Stripe	H10
Cylinder head	B 2	Taillight	H 4
Cylinder head cover	B 1	Tools	H 9
Exhaust muffler	G 5	Top bridge	E 7
Fender FR.	E10	Transmission	C10
Fender RR.	H 2	Valve	B 4
Fork FR.	E11	Wheel FR.	F 4
Fork RR.	G11	Wheel RR.	F 8
Frame body	H 6	Winker	H 3
Fuel tank	F 10	Wire harness	H 5
Gearshift drum	C12		
Generator	B 8		

Ref. No.	H/C	Part No.	Description	Reqd. No. '83	Serial No. From	Serial No. To	Remarks
1	0198234	17247-303-000	GROMMET A, AIR CLEANER CASE	1			
2	1053990	31500-461-771	BATTERY (12V14)	1			
3	1051952	32601-438-000	CABLE, BATTERY EARTH (A)	1			
4	1051960	32602-438-000	CABLE, BATTERY EARTH (B)	1			
5	1306620	50320-MG5-670	BOX ASSY., BATTERY	1			
6	0718577	50324-425-010	COLLAR, 6.3X13	4			
7	1306638	50327-MG5-670	BOX COMP., TOOL	1			
8	1306653	50328-MG5-670	TUBE, BATTERY	1			
9	0718601	50328-425-000	RUBBER A, BATTERY BOX	2			
10	0718619	50329-425-000	RUBBER B, BATTERY BOX	2			
11	0952515	50334-461-770	CUSHION, BATTERY	1			
12	1061431	64203-166-610	COLLAR, FAIRING STAY	2			
13	0338178	83606-356-000	BAND, SIDE COVER	1			
14	0840215	91410-679-000	CLIP, 2X60	1			
15	0142265	92300-06012	BOLT, SLOTTED, 6X12	1			
16	0954818	93500-06010-0G	SCREW, PAN, 6X10	2			
•17	0350488	95700-06010-00	BOLT, FLANGE, 6X10	1			
18	0484485	95700-06025-00	BOLT, FLANGE, 6X25	4			

CB1100F '83 Frame No.; SC110*DM000001 To Subsequent

© HONDA MOTOR CO., LTD. 1983

G 3

Block No.
F-18

Air cleaner

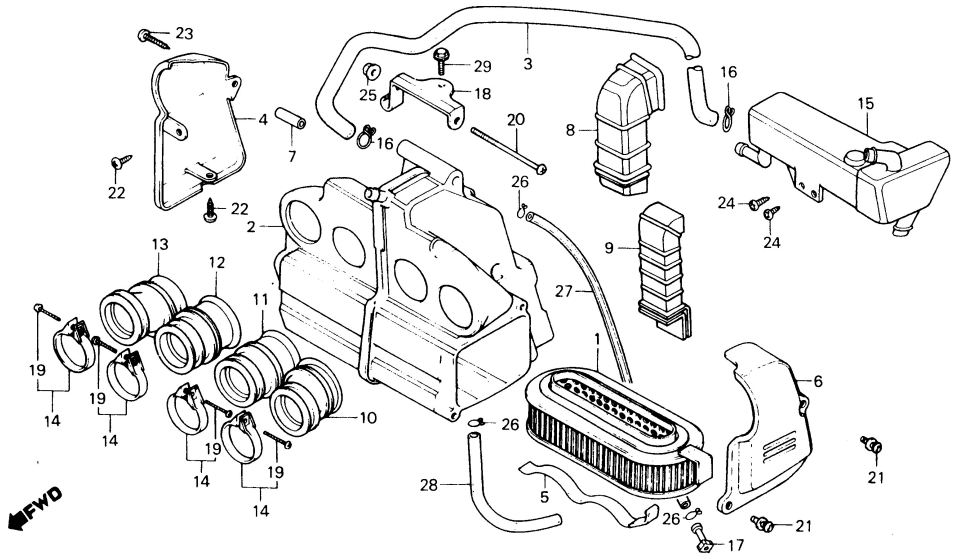

BMG5–23

CB1100F '83

Air cleaner	G 3	Handle lever	E 4
Battery	G 2	Handle pipe	E 7
Brake caliper FR.	F 2	Handle switch	E 4
Brake caliper RR.	F 6	Headlight	E 1
Brake master cylinder FR.	E 6	Ignition coil	H 5
Brake master cylinder RR.	F 5	Meter	E 3
Brake pedal	G 7	Oil cooler	H 6
Cable	E 4	Oil filter	C 3
Cam chain	B 6	Oil pan	C 3
Cam chain tensioner	B 6	Oil pump	C 1
Camshaft	B 4	Piston	C 6
Carburetor (Assy. • Link)	D 1	Regulator	F12
Carburetor (Component parts)	D 2	Seat	F11
Chain case	G11	Side cover	F12
Change pedal	G 7	Spark unit	F12
Clutch	B10	Stand	G10
Crankcase	C 4	Starting motor	B12
Crankcase cover L.	B11	Steering stem	E 9
Crankshaft	C 6	Step	G 8
Cushion RR.	H 1	Stripe	H10
Cylinder head	B 2	Taillight	H 4
Cylinder head cover	B 1	Tools	H 9
Exhaust muffler	G 5	Top bridge	E 7
Fender FR.	E10	Transmission	C10
Fender RR.	H 2	Valve	B 4
Fork FR.	E11	Wheel FR.	F 4
Fork RR.	G11	Wheel RR.	F 8
Frame body	H 6	Winker	H 3
Fuel tank	F10	Wire harness	H 5
Gearshift drum	C12		
Generator	B 8		

Ref. No.	H/C	Part No.	Description	Reqd. No. '83	Serial No. From	To	Remarks
1	0717512	17211-425-000	ELEMENT, AIR CLEANER	1			
2	1305309	17213-MA3-660	CASE COMP., AIR CLEANER	1			
3	1305317	17217-MG5-670	TUBE, BREATHER (D)	1			
4	0764530	17222-438-000	COVER, R. AIR CLEANER	1			
5	0717546	17223-425-000	SPRING, ELEMENT SETTING	1			
6	0764548	17230-438-000	COVER COMP., L. AIR CLEANER	1			
7	0947267	17231-438-000	COLLAR, R. AIR CLEANER COVER	1			
8	1305325	17240-MA3-000	DUCT, AIR CLEANER IN.	1			
9	1305333	17241-MA3-660	SUB DUCT, AIR CLEANER IN.	1			
10	0926519	17251-438-000	TUBE 1, AIR CLEANER CONNECTING	1			
11	0926527	17252-438-000	TUBE 2, AIR CLEANER CONNECTING	1			
12	0926535	17253-438-000	TUBE 3, AIR CLEANER CONNECTING	1			
13	0926543	17254-438-000	TUBE 4, AIR CLEANER CONNECTING	1			
14	0717595	17256-425-010	BAND ASSY., AIR CLEANER CONNECTING TUBE	4			
15	1305341	17300-MG5-670	TANK, BREATHER	1			
16	0340984	17316-611-000	CLIP, BREATHER TUBE	2			
17	0669002	17370-419-700	PLUG, BREATHER TUBE	1			
18	0717611	17375-425-000	STAY, AIR CLEANER HANGER	1			
19	0477471	93500-05025-0G	SCREW, PAN, 5X25	4			
20	0057711	93500-06070	SCREW, PAN, 6X70	1			
21	0487017	93891-05016-07	SCREW-WASHER, 5X16	2			
22	0947283	93903-14380	SCREW, TAPPING, 4X12	2			
23	0947275	93903-14880	SCREW, TAPPING, 4X35	1			
24	0612663	93903-35110	SCREW, TAPPING, 5X10	2			
25	0471623	94050-06000	NUT, FLANGE, 6MM	1			
26	0073700	95002-80000	CLIP C12, TUBE	3			

CB1100F '83 Frame No.; SC110*DM000001 To Subsequent

© HONDA MOTOR CO., LTD. 1983

Block No.
F-18

Air cleaner

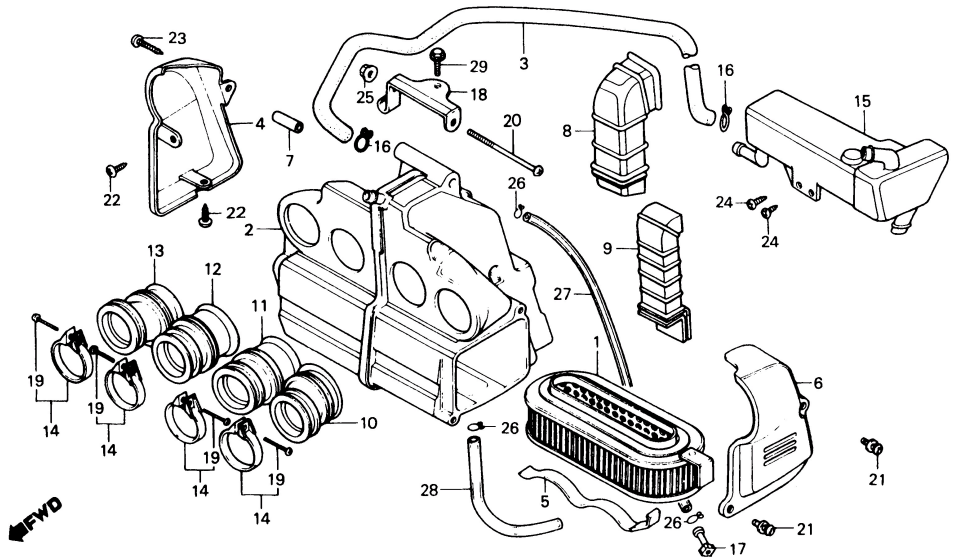

BMG5 – 23

CB1100F '83

Air cleaner	G 3	Handle lever	E 4
Battery	G 2	Handle pipe	E 7
Brake caliper FR.	F 2	Handle switch	E 4
Brake caliper RR.	F 6	Headlight	E 1
Brake master cylinder FR.	E 6	Ignition coil	H 5
Brake master cylinder RR.	F 5	Meter	E 3
Brake pedal	G 7	Oil cooler	H 6
Cable	E 4	Oil filter	C 3
Cam chain	B 6	Oil pan	C 3
Cam chain tensioner	B 6	Oil pump	C 1
Camshaft	B 4	Piston	C 6
Carburetor (Assy. • Link)	D 1	Regulator	F 12
Carburetor (Component parts)	D 2	Seat	F 11
Chain case	G11	Side cover	F 12
Change pedal	G 7	Spark unit	F 12
Clutch	B10	Stand	G10
Crankcase	C 4	Starting motor	B12
Crankcase cover L.	B11	Steering stem	E 9
Crankshaft	C 6	Step	G 8
Cushion RR.	H 1	Stripe	H10
Cylinder head	B 2	Taillight	H 4
Cylinder head cover	B 1	Tools	H 9
Exhaust muffler	G 5	Top bridge	E 7
Fender FR.	E10	Transmission	C10
Fender RR.	H 2	Valve	B 4
Fork FR.	E11	Wheel FR.	F 4
Fork RR.	G11	Wheel RR.	F 8
Frame body	H 6	Winker	H 3
Fuel tank	F 10	Wire harness	H 5
Gearshift drum	C12		
Generator	B 8		

Ref. No.	H/C	Part No.	Description	Reqd. No. '83	Serial No. From	To	Remarks
27	0721043	95003-23036-10	TUBE, VINYL, 8X12X360	1			
28	1311380	95003-23047-31	TUBE, VINYL, 8X12X470	1			
29	0496653	95700-06016-00	BOLT, FLANGE, 6X16	1			

CB1100F '83 Frame No.; SC110*DM000001 To Subsequent

© HONDA MOTOR CO., LTD. 1983

G 5

Block No.
F-19

Exhaust muffler

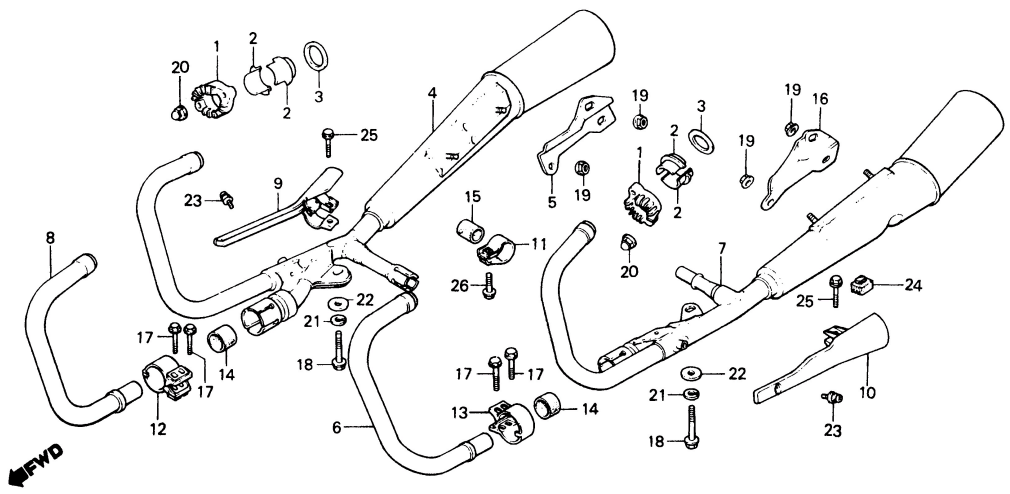

BMG5—24

CB1100F '83

Air cleaner	G 3	Handle lever	E 4
Battery	G 2	Handle pipe	E 7
Brake caliper FR.	F 2	Handle switch	E 4
Brake caliper RR.	F 6	Headlight	E 1
Brake master cylinder FR.	E 6	Ignition coil	H 5
Brake master cylinder RR.	F 5	Meter	E 3
Brake pedal	G 7	Oil cooler	H 6
Cable	E 4	Oil filter	C 3
Cam chain	B 6	Oil pan	C 3
Cam chain tensioner	B 6	Oil pump	C 1
Camshaft	B 4	Piston	C 6
Carburetor (Assy. • Link)	D 1	Regulator	F 12
Carburetor (Component parts)	D 2	Seat	F 11
Chain case	G11	Side cover	F 12
Change pedal	G 7	Spark unit	F 12
Clutch	B10	Stand	G10
Crankcase	C 4	Starting motor	B12
Crankcase cover L.	B11	Steering stem	E 9
Crankshaft	C 6	Step	G 8
Cushion RR.	H 1	Stripe	H10
Cylinder head	B 2	Taillight	H 4
Cylinder head cover	B 1	Tools	H 9
Exhaust muffler	G 5	Top bridge	E 7
Fender FR.	E10	Transmission	C10
Fender RR.	H 2	Valve	B 4
Fork FR.	E11	Wheel FR.	F 4
Fork RR.	G11	Wheel RR.	F 8
Frame body	H 6	Winker	H 3
Fuel tank	F10	Wire harness	H 5
Gearshift drum	C12		
Generator	B 8		

Ref. No.	H/C	Part No.	Description	Reqd. No. '83	Serial No. From	To	Remarks
1	0717686	18231-425-000	JOINT, EX. PIPE	4			
2	0717694	18233-425-000	COLLAR, EX. PIPE JOINT	8			
3	0042788	18291-254-000	GASKET, EX. PIPE	4			
4	1305440	18315-MG5-670	MUFFLER COMP., R. EX. 18315-MG5-671	1		DM006673	
*	1501584	18315-MG5-671	MUFFLER COMP., R. EX.	1	DM006674		
5	1051663	18316-438-670	STAY, R. MUFFLER	1			
6	1305457	18320-MG5-670	PIPE 2, EX.	1			
7	1305465	18325-MG5-670	MUFFLER COMP., L. EX. 18325-MG5-671	1		DM006673	
*	1505866	18325-MG5-671	MUFFLER COMP., L. EX.	1	DM006674		
8	1305473	18330-MG5-670	PIPE 3, EX.	1			
9	1305481	18345-MG5-670	PROTECTOR, R. MUFFLER JOINT	1			
10	1305499	18355-MG5-670	PROTECTOR, L. MUFFLER JOINT	1			
11	1305507	18372-MG5-670	BAND, EX. PIPE	1			
*12	1305515	18373-MG5-670	BAND, L. MUFFLER	1			
*13	1305523	18374-MG5-670	BAND, R. MUFFLER	1			
14	0764662	18391-438-000	PACKING, MUFFLER	2			
15	0909705	18391-461-000	PACKING, MUFFLER	1			
16	1051721	18416-438-670	STAY, L. MUFFLER	1			
17	1311893	90104-MG5-670	BOLT, FLANGE, 8X32	4			
18	1053065	90151-438-670	BOLT, UBS, 10X48	2			
19	0758375	90208-425-870	NUT, FLANGE, 8MM	4			
20	1213156	90304-ME1-670	NUT, CAP, 8MM	8			
21	0681015	90481-430-000	WASHER, SPRING, 10MM	2			
22	1053115	90531-438-670	WASHER, 10X32	2			
23	1311323	93893-06010-07	SCREW-WASHER, 6X10	2			
24	0255638	95011-61000	RUBBER A, STAND STOPPER	1			

CB1100F '83 Frame No.; SC110*DM000001 To Subsequent

© HONDA MOTOR CO., LTD. 1983

Block No.
F-19

Exhaust muffler

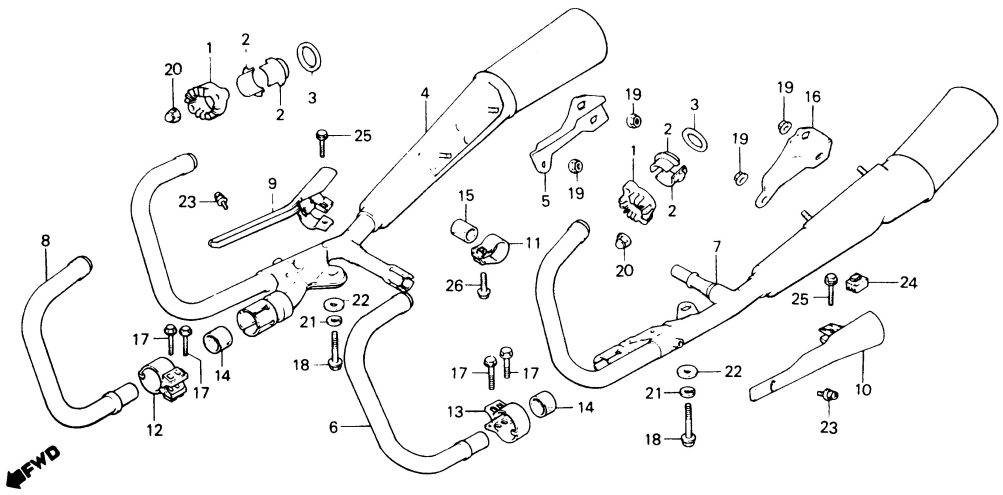

BMG5 – 24

CB1100F '83

Air cleaner	G 3	Handle lever	E 4
Battery	G 2	Handle pipe	E 7
Brake caliper FR.	F 2	Handle switch	E 4
Brake caliper RR.	F 6	Headlight	E 1
Brake master cylinder FR.	E 6	Ignition coil	H 5
Brake master cylinder RR.	F 5	Meter	E 3
Brake pedal	G 7	Oil cooler	H 6
Cable	E 4	Oil filter	C 3
Cam chain	B 6	Oil pan	C 3
Cam chain tensioner	B 6	Oil pump	C 1
Camshaft	B 4	Piston	C 6
Carburetor (Assy. • Link)	D 1	Regulator	F12
Carburetor (Component parts)	D 2	Seat	F11
Chain case	G11	Side cover	F12
Change pedal	G 7	Spark unit	F12
Clutch	B10	Stand	G10
Crankcase	C 4	Starting motor	B12
Crankcase cover L.	B11	Steering stem	E 9
Crankshaft	C 6	Step	G 8
Cushion RR.	H 1	Stripe	H10
Cylinder head	B 2	Taillight	H 4
Cylinder head cover	B 1	Tools	H 9
Exhaust muffler	G 5	Top bridge	E 7
Fender FR.	E10	Transmission	C10
Fender RR.	H 2	Valve	B 4
Fork FR.	E11	Wheel FR.	F 4
Fork RR.	G11	Wheel RR.	F 8
Frame body	H 6	Winker	H 3
Fuel tank	F10	Wire harness	H 5
Gearshift drum	C12		
Generator	B 8		

Ref. No.	H/C	Part No.	Description	Reqd. No. '83	Serial No. From	To	Remarks
25	0721076	95700-06025-07	BOLT, FLANGE, 6X25	2			
26	1213339	95700-08020-07	BOLT, FLANGE, 8X20	1			

CB1100F '83 Frame No.; SC110•DM000001 To Subsequent

© HONDA MOTOR CO., LTD. 1983

Block No.
F-20

Brake pedal • Change pedal

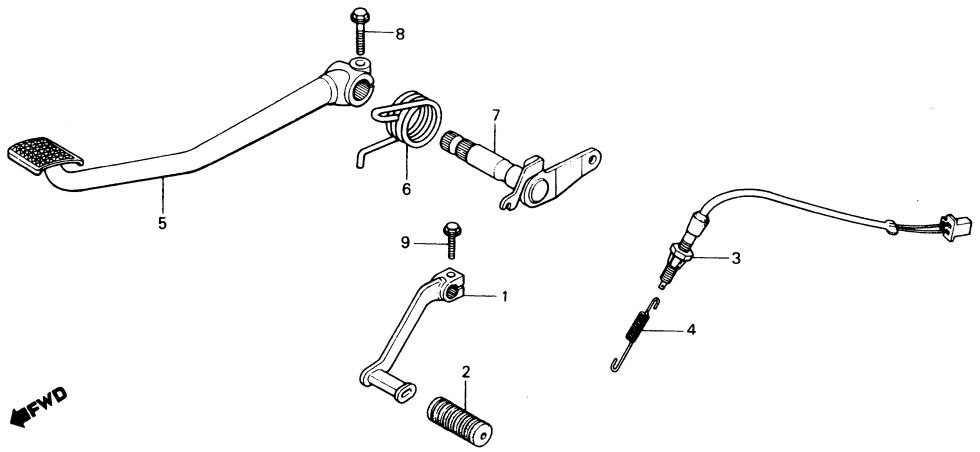

B438-98

CB1100F '83

Air cleaner	G 3	Handle lever	E 4
Battery	G 2	Handle pipe	E 7
Brake caliper FR.	F 2	Handle switch	E 4
Brake caliper RR.	F 6	Headlight	E 1
Brake master cylinder FR.	E 6	Ignition coil	H 5
Brake master cylinder RR.	F 5	Meter	E 3
Brake pedal	G 7	Oil cooler	H 6
Cable	E 4	Oil filter	C 3
Cam chain	B 6	Oil pan	C 3
Cam chain tensioner	B 6	Oil pump	C 1
Camshaft	B 4	Piston	C 6
Carburetor (Assy. • Link)	D 1	Regulator	F 12
Carburetor (Component parts)	D 2	Seat	F 11
Chain case	G11	Side cover	F 12
Change pedal	G 7	Spark unit	F 12
Clutch	B10	Stand	G10
Crankcase	C 4	Starting motor	B12
Crankcase cover L.	B11	Steering stem	E 9
Crankshaft	C 6	Step	G 8
Cushion RR.	H 1	Stripe	H10
Cylinder head	B 2	Taillight	H 4
Cylinder head cover	B 1	Tools	H 9
Exhaust muffler	G 5	Top bridge	E 7
Fender FR.	E10	Transmission	C10
Fender RR.	H 2	Valve	B 4
Fork FR.	E11	Wheel FR.	F 4
Fork RR.	G11	Wheel RR.	F 8
Frame body	H 6	Winker	H 3
Fuel tank	F 10	Wire harness	H 5
Gearshift drum	C12		
Generator	B 8		

Ref. No.	H/C	Part No.	Description	Reqd. No. '83	Serial No. From	Serial No. To	Remarks
1	1076843	24701-MC3-670	PEDAL, GEAR CHANGE	1			
2	0494377	24781-419-000	RUBBER, GEAR CHANGE PEDAL	1			
3	0764381	35350-438-000	SWITCH ASSY., RR. STOP	1			
4	0820746	35357-425-610	SPRING, STOP SWITCH	1			
5	1077270	46500-MC3-670	PEDAL COMP., RR. BRAKE	1			
6	0765040	46514-445-670	SPRING, BRAKE PEDAL	1			
7	0765057	46515-445-670	SHAFT COMP., RR. BRAKE PIVOT	1			
8	1311133	90168-MA3-660	BOLT, SPECIAL FLANGE, 8X26	1			
9	1113695	96000-06020-02	BOLT, FLANGE, 6X20	1			

CB1100F '83 Frame No.; SC110*DM000001 To Subsequent

© HONDA MOTOR CO., LTD. 1983

Block No.
F-21

Step

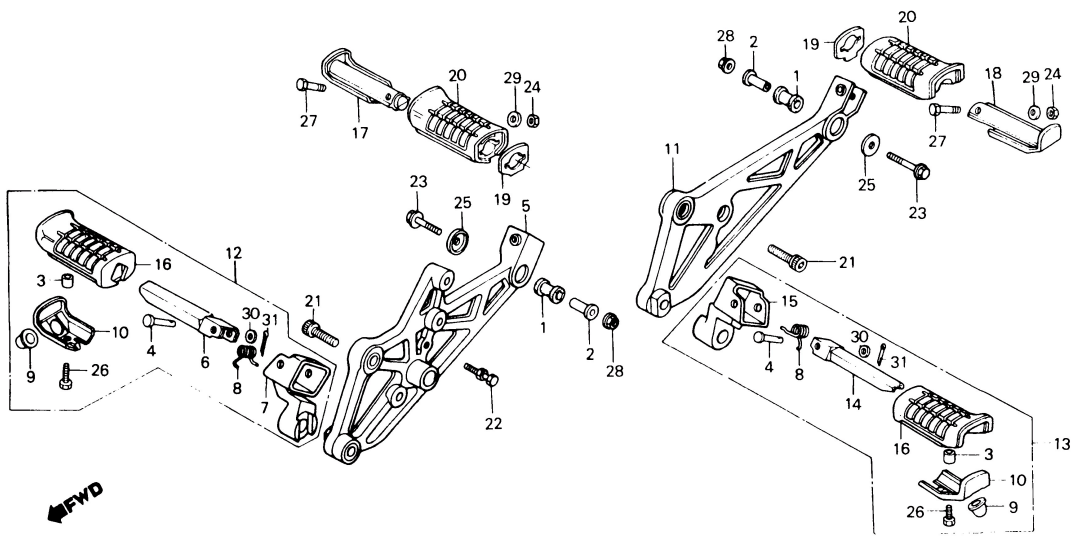

BMG5 - 25

CB1100F '83

Air cleaner	G 3	Handle lever	E 4
Battery	G 2	Handle pipe	E 7
Brake caliper FR.	F 2	Handle switch	E 4
Brake caliper RR.	F 6	Headlight	E 1
Brake master cylinder FR.	E 6	Ignition coil	H 5
Brake master cylinder RR.	F 5	Meter	E 3
Brake pedal	G 7	Oil cooler	H 6
Cable	E 4	Oil filter	C 3
Cam chain	B 6	Oil pan	C 3
Cam chain tensioner	B 6	Oil pump	C 1
Camshaft	B 4	Piston	C 6
Carburetor (Assy. • Link)	D 1	Regulator	F12
Carburetor (Component parts)	D 2	Seat	F11
Chain case	G11	Side cover	F12
Change pedal	G 7	Spark unit	F12
Clutch	B10	Stand	G10
Crankcase	C 4	Starting motor	B12
Crankcase cover L.	B11	Steering stem	E 9
Crankshaft	C 6	Step	G 8
Cushion RR.	H 1	Stripe	H10
Cylinder head	B 2	Taillight	H 4
Cylinder head cover	B 1	Tools	H 9
Exhaust muffler	G 5	Top bridge	E 7
Fender FR.	E10	Transmission	C10
Fender RR.	H 2	Valve	B 4
Fork FR.	E11	Wheel FR.	F 4
Fork RR.	G11	Wheel RR.	F 8
Frame body	H 6	Winker	H 3
Fuel tank	F10	Wire harness	H 5
Gearshift drum	C12		
Generator	B 8		

Ref. No.	H/C	Part No.	Description	Reqd. No. '83	Serial No. From	To	Remarks
1	1051739	18421-438-670	RUBBER, MUFFLER MOUNTING	2			
2	0764696	18422-438-000	COLLAR, MUFFLER MOUNTING	2			
3	0827626	40515-413-000	COLLAR, CHAIN CASE	2			
4	0019349	50603-033-000	PIN, STEP BAR JOINT	2			
5	1306679	50610-MG5-670	HOLDER COMP., R. STEP	1			
6	1248848	50612-MB0-000	BAR COMP., R. STEP	1			
7	1306687	50615-MG5-670	BRACKET COMP., R. STEP	1			
8	1248913	50617-195-000	SPRING, STEP RETURN	2			
9	1248921	50618-MB0-000	SLIDER, STEP	2			
10	1248947	50619-MB0-000	STOPPER, STEP RUBBER	2			
11	1306695	50620-MG5-670	HOLDER COMP., L. STEP	1			
12	1306703	50630-MG5-670	STEP ASSY., R. MAIN	1			
13	1306711	50640-MG5-670	STEP ASSY., L. MAIN	1			
14	1249002	50642-MB0-000	BAR COMP., L. STEP	1			
15	1306729	50643-MG5-670	BRACKET COMP., L. STEP	1			
16	1249036	50661-MB0-000	RUBBER, MAIN STEP	2			
17	1249119	50711-MB0-000	BAR, R. PILLION STEP	1			
18	1249135	50712-MB0-000	BAR, L. PILLION STEP	1			
19	1249168	50714-MB0-000	WASHER, PILLION STEP	2			
20	1249184	50715-MB0-000	RUBBER, PILLION STEP	2			
21	0695205	90109-422-670	BOLT, SOCKET, 10X35	2			
22	0769158	90117-426-000	BOLT, RR. BRAKE SPRING	1			
23	0695221	90176-422-000	BOLT, SPECIAL FLANGE, 10X50	2			
24	1187707	90301-473-003	NUT, U, 6MM	2			
25	0765719	90557-438-000	WASHER, SPECIAL, 10MM	2			
26	0313197	92000-06016-0A	BOLT, HEX., 6X16	2			
27	1311281	92200-06045-0B	BOLT, HEX., 6X45	2			

CB1100F '83 Frame No.; SC110*DM000001 To Subsequent

© HONDA MOTOR CO., LTD. 1983

G 9

Block No.
F-21

Step

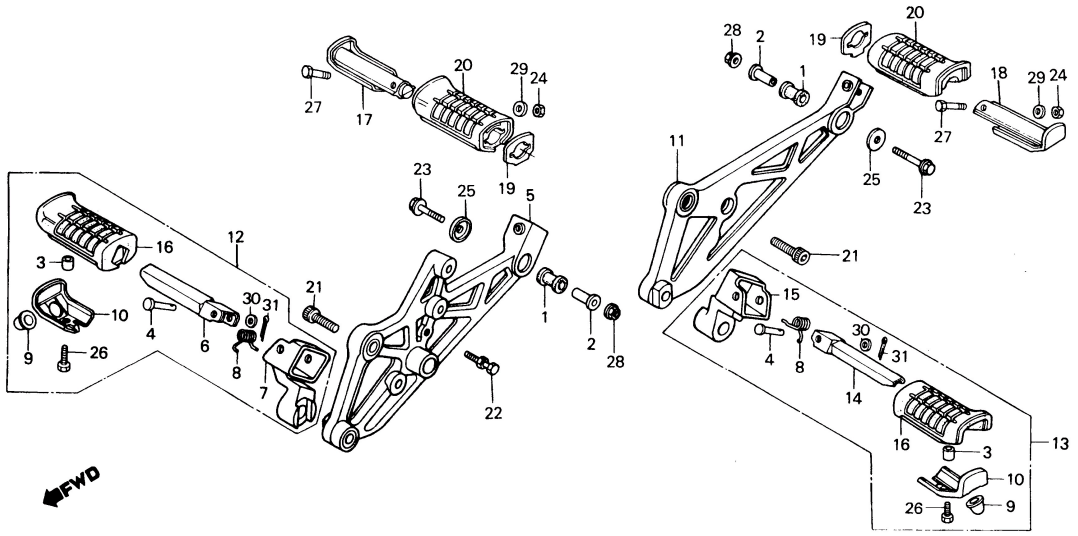

BMG5-25

CB1100F '83

Air cleaner	G 3	Handle lever	E 4
Battery	G 2	Handle pipe	E 7
Brake caliper FR.	F 2	Handle switch	E 4
Brake caliper RR.	F 6	Headlight	E 1
Brake master cylinder FR.	E 6	Ignition coil	H 5
Brake master cylinder RR.	F 5	Meter	E 3
Brake pedal	G 7	Oil cooler	H 6
Cable	E 4	Oil filter	C 3
Cam chain	B 6	Oil pan	C 3
Cam chain tensioner	B 6	Oil pump	C 1
Camshaft	B 4	Piston	C 6
Carburetor (Assy. • Link)	D 1	Regulator	F 12
Carburetor (Component parts)	D 2	Seat	F 11
Chain case	G11	Side cover	F 12
Change pedal	G 7	Spark unit	F 12
Clutch	B10	Stand	G10
Crankcase	C 4	Starting motor	B12
Crankcase cover L.	B11	Steering stem	E 9
Crankshaft	C 6	Step	G 8
Cushion RR.	H 1	Stripe	H10
Cylinder head	B 2	Taillight	H 4
Cylinder head cover	B 1	Tools	H 9
Exhaust muffler	G 5	Top bridge	E 7
Fender FR.	E10	Transmission	C10
Fender RR.	H 2	Valve	B 4
Fork FR.	E11	Wheel FR.	F 4
Fork RR.	G11	Wheel RR.	F 8
Frame body	H 6	Winker	H 3
Fuel tank	F10	Wire harness	H 5
Gearshift drum	C12		
Generator	B 8		

Ref. No.	H/C	Part No.	Description	Reqd. No. '83	Serial No. From	To	Remarks
28	0483867	94050-10000	NUT, FLANGE, 10MM	2			
29	0059071	94101-06000	WASHER, PLAIN, 6MM	2			
30	0059097	94101-08000	WASHER, PLAIN, 8MM	2			
31	0058313	94201-16150	PIN, SPLIT, 1.6X15	2			

CB1100F '83 Frame No.; SC110*DM000001 To Subsequent

© HONDA MOTOR CO., LTD. 1983

Block No.
F-22

Stand

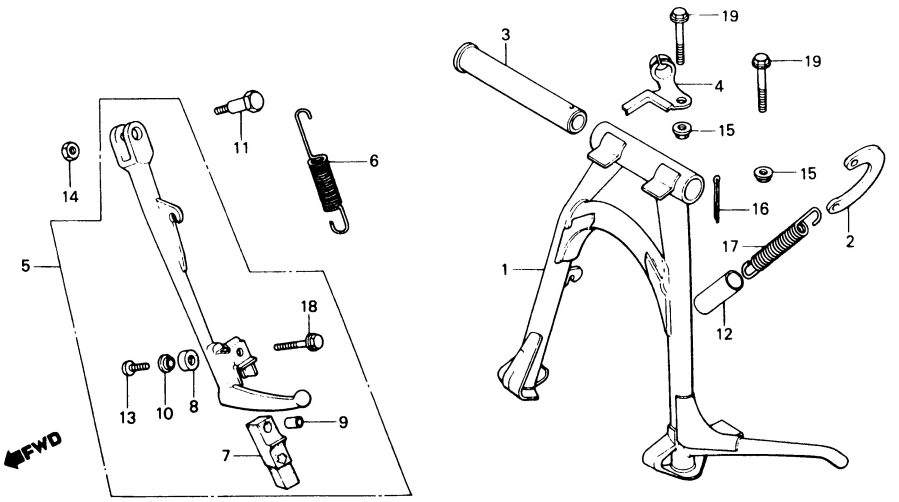

B438-31

CB1100F '83

Air cleaner	G 3	Handle lever	E 4
Battery	G 2	Handle pipe	E 7
Brake caliper FR.	F 2	Handle switch	E 4
Brake caliper RR.	F 6	Headlight	E 1
Brake master cylinder FR.	E 6	Ignition coil	H 5
Brake master cylinder RR.	F 5	Meter	E 3
Brake pedal	G 7	Oil cooler	H 6
Cable	E 4	Oil filter	C 3
Cam chain	B 6	Oil pan	C 3
Cam chain tensioner	B 6	Oil pump	C 1
Camshaft	B 4	Piston	C 6
Carburetor (Assy. • Link)	D 1	Regulator	F 12
Carburetor (Component parts)	D 2	Seat	F 11
Chain case	G11	Side cover	F 12
Change pedal	G 7	Spark unit	F 12
Clutch	B10	Stand	G10
Crankcase	C 4	Starting motor	B12
Crankcase cover L.	B11	Steering stem	E 9
Crankshaft	C 6	Step	G 8
Cushion RR.	H 1	Stripe	H10
Cylinder head	B 2	Taillight	H 4
Cylinder head cover	B 1	Tools	H 9
Exhaust muffler	G 5	Top bridge	E 7
Fender FR.	E10	Transmission	C10
Fender RR.	H 2	Valve	B 4
Fork FR.	E11	Wheel FR.	F 4
Fork RR.	G11	Wheel RR.	F 8
Frame body	H 6	Winker	H 3
Fuel tank	F 10	Wire harness	H 5
Gearshift drum	C12		
Generator	B 8		

Ref. No.	H/C	Part No.	Description	Reqd. No. '83	Serial No. From	Serial No. To	Remarks
1	1093020	50500-438-730	STAND COMP., MAIN	1			
2	0718668	50523-425-000	PLATE, MAIN STAND SPRING	1			
3	0192211	50526-300-000	PIPE, MAIN STAND PIVOT	1			
4	0718676	50527-425-000	GUIDE, DRAIN TUBE	1			
5	1040690	50540-438-010	BAR ASSY., SIDE STAND	1			
6	0803312	50541-445-010	SPRING, SIDE STAND	1			
7	0382648	50548-356-700	RUBBER, STAND	1			
8	0765164	50548-438-000	RUBBER, SIDE STAND	1			
9	0382655	50549-356-700	COLLAR, STAND RUBBER SETTING	1			
10	0765172	50549-438-000	COLLAR, RUBBER SETTING	1			
11	0115246	90108-223-000	SCREW, SIDE STAND PIVOT	1			
12	0486910	90125-410-000	COVER, MAIN STAND SPRING	1			
13	0057406	93500-06010	SCREW, PAN, 6X10	1			
14	0300608	94031-10000	NUT, HEX., 10MM	1			
15	0481143	94050-08000	NUT, FLANGE, 8MM	2			
16	0145581	94201-25250	PIN, SPLIT, 2.5X25	1			
17	0414250	95014-71702	SPRING G, MAIN STAND	1			
18	0721076	95700-06025-07	BOLT, FLANGE, 6X25	1			
19	0671222	95700-08040-00	BOLT, FLANGE, 8X40	2			

CB1100F '83 Frame No.; SC110*DM000001 To Subsequent

© HONDA MOTOR CO., LTD. 1983

G 11

Block No.
F-23

Rear fork • Chain case

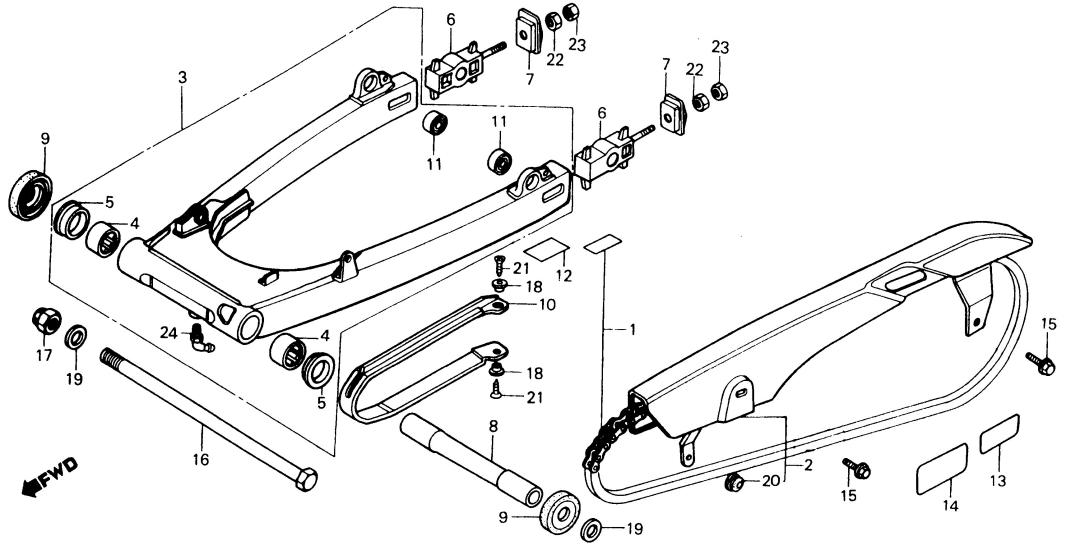

BMG5–26

CB1100F '83

Air cleaner	G 3	Handle lever	E 4
Battery	G 2	Handle pipe	E 7
Brake caliper FR.	F 2	Handle switch	E 4
Brake caliper RR.	F 6	Headlight	E 1
Brake master cylinder FR.	E 6	Ignition coil	H 5
Brake master cylinder RR.	F 5	Meter	E 3
Brake pedal	G 7	Oil cooler	H 6
Cable	E 4	Oil filter	C 3
Cam chain	B 6	Oil pan	C 3
Cam chain tensioner	B 6	Oil pump	C 1
Camshaft	B 4	Piston	C 6
Carburetor (Assy. • Link)	D 1	Regulator	F 12
Carburetor (Component parts)	D 2	Seat	F 11
Chain case	G11	Side cover	F 12
Change pedal	G 7	Spark unit	F 12
Clutch	B10	Stand	G10
Crankcase	C 4	Starting motor	B12
Crankcase cover L.	B11	Steering stem	E 9
Crankshaft	C 6	Step	G 8
Cushion RR.	H 1	Stripe	H10
Cylinder head	B 2	Taillight	H 4
Cylinder head cover	B 1	Tools	H 9
Exhaust muffler	G 5	Top bridge	E 7
Fender FR.	E10	Transmission	C10
Fender RR.	H 2	Valve	B 4
Fork FR.	E11	Wheel FR.	F 4
Fork RR.	G11	Wheel RR.	F 8
Frame body	H 6	Winker	H 3
Fuel tank	F10	Wire harness	H 5
Gearshift drum	C12		
Generator	B 8		

Ref. No.	H/C	Part No.	Description	Reqd. No. '83	Serial No. From	Serial No. To	Remarks
1	1306216	405A3-MG5-003	CHAIN SET, DRIVE (DID 50ZL-104LE)	1			
	1306224	405A3-MG5-005	CHAIN SET, DRIVE (RK50L0-104LE)	1			
2	1306232	40510-MG5-670	CASE, DRIVE CHAIN	1			
3	1306877	52100-MG5-670ZA	FORK ASSY., RR. *NH-35M* (CLOUD SILVER)	1			
4	0824136	52108-425-831	BEARING, RR. FORK PIVOT (TOMUSON)	2			
	0924092	52108-425-832	BEARING, RR. FORK PIVOT (KOYO)	2			
5	0824144	52109-425-831	BUSH, THRUST	2			
6	1306885	52120-MG5-670	COLLAR COMP., CHAIN TENSIONER	2			
7	1306893	52121-MG5-670	PLATE, CHAIN TENSIONER	2			
8	0824151	52141-425-830	COLLAR, RR. FORK CENTER	1			
9	0824169	52144-425-831	CAP, DUST SEAL	2			
10	1306901	52170-MG5-670	SLIDER, CHAIN	1			
11	0385492	52451-357-000	BUSH, RR. DAMPER	2			
12	1310879	87505-MG5-670	MARK, TIRE CAUTION	1			
13	1310895	87507-MG5-670	MARK, CHAIN CAUTION	1			
14	0954354	87512-461-770	MARK, ACCESSORIES LOADING CAUTION	1			
15	1113042	90013-425-700	BOLT, FLANGE, 6X8	2			
16	1310978	90121-438-610	BOLT, RR. FORK PIVOT	1			
17	0824185	90354-425-830	NUT, SELF LOCK, 16MM	1			
•18	0132621	90556-044-000	WASHER, FR. FENDER SETTING	2			
19	0824193	90600-425-830	WASHER, PLAIN, 16MM	2			
20	1073980	90854-SA0-680	GROMMET, FUEL TUBE	1			
21	1311331	93901-25220	SCREW, TAPPING, 5X12	2			

CB1100F '83 Frame No.; SC110*DM000001 To Subsequent

© HONDA MOTOR CO., LTD. 1983

G 12

Block No.
F-23

Rear fork • Chain case

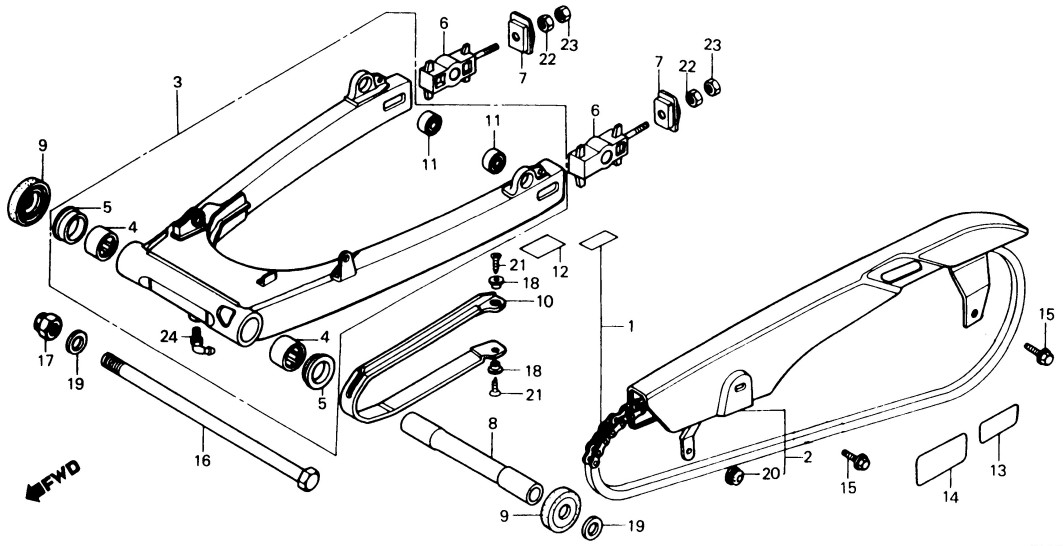

BMG5 – 26

Ref. No.	H/C	Part No.	Description	Reqd. No. '83	Serial No. From	To	Remarks
22	0114686	94030-08000	NUT, HEX., 8MM	2			
23	0216267	94031-08000	NUT, HEX., 8MM	2			
24	0710004	96201-60000	NIPPLE, GREASE, C.T6	1			

CB1100F '83

Air cleaner	G 3	Handle lever	E 4
Battery	G 2	Handle pipe	E 7
Brake caliper FR.	F 2	Handle switch	E 4
Brake caliper RR.	F 6	Headlight	E 1
Brake master cylinder FR.	E 6	Ignition coil	H 5
Brake master cylinder RR.	F 5	Meter	E 3
Brake pedal	G 7	Oil cooler	H 6
Cable	E 4	Oil filter	C 3
Cam chain	B 6	Oil pan	C 3
Cam chain tensioner	B 6	Oil pump	C 1
Camshaft	B 4	Piston	C 6
Carburetor (Assy. • Link)	D 1	Regulator	F12
Carburetor (Component parts)	D 2	Seat	F11
Chain case	G11	Side cover	F12
Change pedal	G 7	Spark unit	F12
Clutch	B10	Stand	G10
Crankcase	C 4	Starting motor	B12
Crankcase cover L.	B11	Steering stem	E 9
Crankshaft	C 6	Step	G 8
Cushion RR.	H 1	Stripe	H10
Cylinder head	B 2	Taillight	H 4
Cylinder head cover	B 1	Tools	H 9
Exhaust muffler	G 5	Top bridge	E 7
Fender FR.	E10	Transmission	C10
Fender RR.	H 2	Valve	B 4
Fork FR.	E11	Wheel FR.	F 4
Fork RR.	G11	Wheel RR.	F 8
Frame body	H 6	Winker	H 3
Fuel tank	F10	Wire harness	H 5
Gearshift drum	C12		
Generator	B 8		

CB1100F '83 Frame No.; SC110*DM000001 To Subsequent

© HONDA MOTOR CO., LTD. 1983

Block No.
F-24

Rear cushion

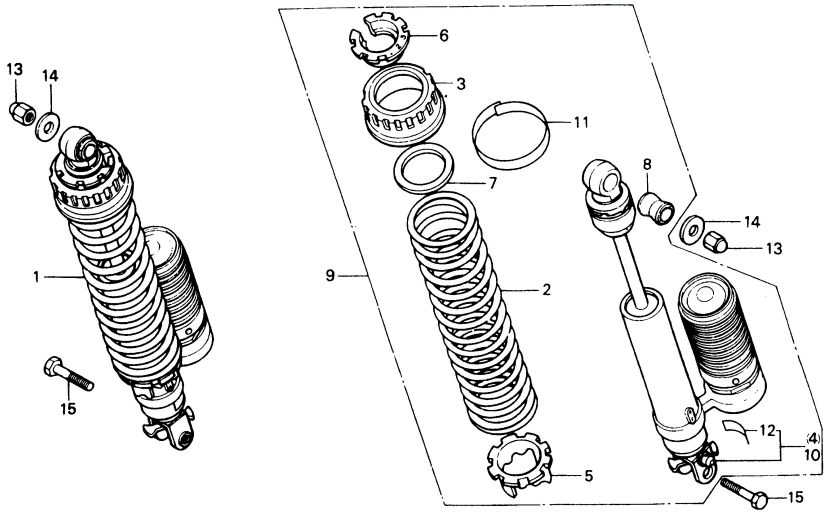

BMG5 – 27

CB1100F '83

Air cleaner	G 3	Handle lever	E 4
Battery	G 2	Handle pipe	E 7
Brake caliper FR.	F 2	Handle switch	E 4
Brake caliper RR.	F 6	Headlight	E 1
Brake master cylinder FR.	E 6	Ignition coil	H 5
Brake master cylinder RR.	F 5	Meter	E 3
Brake pedal	G 7	Oil cooler	H 6
Cable	E 4	Oil filter	C 3
Cam chain	B 6	Oil pan	C 3
Cam chain tensioner	B 6	Oil pump	C 1
Camshaft	B 4	Piston	C 6
Carburetor (Assy. • Link)	D 1	Regulator	F 12
Carburetor (Component parts)	D 2	Seat	F 11
Chain case	G11	Side cover	F 12
Change pedal	G 7	Spark unit	F 12
Clutch	B10	Stand	G10
Crankcase	C 4	Starting motor	B 12
Crankcase cover L.	B11	Steering stem	E 9
Crankshaft	C 6	Step	G 8
Cushion RR.	H 1	Stripe	H10
Cylinder head	B 2	Taillight	H 4
Cylinder head cover	B 1	Tools	H 9
Exhaust muffler	G 5	Top bridge	E 7
Fender FR.	E 10	Transmission	C 10
Fender RR.	H 2	Valve	B 4
Fork FR.	E 11	Wheel FR.	F 4
Fork RR.	G11	Wheel RR.	F 8
Frame body	H 6	Winker	H 3
Fuel tank	F 10	Wire harness	H 5
Gearshift drum	C 12		
Generator	B 8		

Ref. No.	H/C	Part No.	Description	Reqd. No. '83	Serial No. From	To	Remarks
1	1306919	52400-MG5-671	CUSHION ASSY., R. RR.	1			
2	1093046	52401-438-612	SPRING, RR. CUSHION	2			
3	1306927	52402-MG5-671	COVER, SPRING	2			
* 4	1441922	52410-MG5-671	DAMPER COMP., R. RR.	1			
5	0695478	52422-422-003	ADJUSTER, SPRING	2			
6	0824250	52451-422-611	SEAT, SPRING	2			
* 7	1306935	52452-MG5-671	PROTECTOR, COVER	2			
8	0146530	52484-292-000	RUBBER, JOINT	2			
9	1306943	52500-MG5-671	CUSHION ASSY., L. RR.	1			
*10	1441930	52510-MG5-671	DAMPER COMP., L. RR.	1			
11	1052703	52758-438-670	LABEL A	2			
12	1052711	52759-438-670	LABEL B	2			
13	0241588	90309-315-000	NUT, RR. CUSHION UPPER	2			
14	0144873	90521-292-000	WASHER, 10.3MM	2			
15	0112664	93000-10032-0A	BOLT, HEX., 10X32	2			

CB1100F '83 Frame No.; SC110*DM000001 To Subsequent

© HONDA MOTOR CO., LTD. 1983

Block No.
F-25

Rear fender

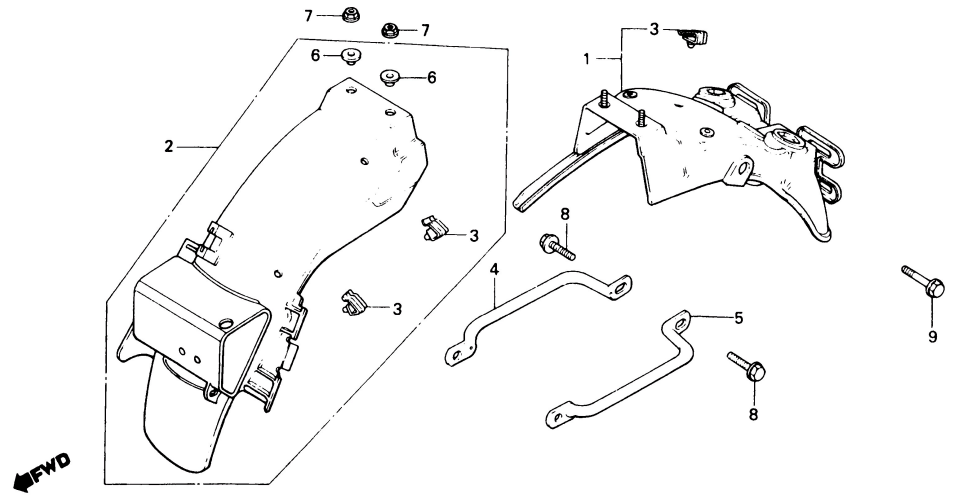

BMG5—28

CB1100F '83

Air cleaner	G 3	Handle lever	E 4
Battery	G 2	Handle pipe	E 7
Brake caliper FR.	F 2	Handle switch	E 4
Brake caliper RR.	F 6	Headlight	E 1
Brake master cylinder FR.	E 6	Ignition coil	H 5
Brake master cylinder RR.	F 5	Meter	E 3
Brake pedal	G 7	Oil cooler	H 6
Cable	E 4	Oil filter	C 3
Cam chain	B 6	Oil pan	C 3
Cam chain tensioner	B 6	Oil pump	C 1
Camshaft	B 4	Piston	C 6
Carburetor (Assy. • Link)	D 1	Regulator	F 12
Carburetor (Component parts)	D 2	Seat	F 11
Chain case	G11	Side cover	F 12
Change pedal	G 7	Spark unit	F 12
Clutch	B10	Stand	G10
Crankcase	C 4	Starting motor	B12
Crankcase cover L.	B11	Steering stem	E 9
Crankshaft	C 6	Step	G 8
Cushion RR.	H 1	Stripe	H10
Cylinder head	B 2	Taillight	H 4
Cylinder head cover	B 1	Tools	H 9
Exhaust muffler	G 5	Top bridge	E 7
Fender FR.	E10	Transmission	C10
Fender RR.	H 2	Valve	B 4
Fork FR.	E11	Wheel FR.	F 4
Fork RR.	G11	Wheel RR.	F 8
Frame body	H 6	Winker	H 3
Fuel tank	F10	Wire harness	H 5
Gearshift drum	C12		
Generator	B 8		

Ref. No.	H/C	Part No.	Description	Reqd. No. '83	Serial No. From	To	Remarks
1	0933820	80100-445-671ZA	FENDER COMP. A, RR. *NH-105* (MAT BLACK)	1			
2	1307255	80105-MG5-670	FENDER B, RR.	1			
3	0465351	80110-147-000	CLAMP, CABLE	3			
4	1307321	84100-MG5-670	PIPE, R. RR. GRIP	1			
5	1307339	84200-MG5-670	PIPE, L. RR. GRIP	1			
6	0191494	90512-300-000	WASHER, 6X20	2			
7	0471623	94050-06000	NUT, FLANGE, 6MM	2			
* 8	1213339	95700-08020-07	BOLT, FLANGE, 8X20	2			
9	1311406	95700-08025-07	BOLT, FLANGE, 8X25	2			

CB1100F '83 Frame No.; SC110*DM000001 To Subsequent

© HONDA MOTOR CO., LTD. 1983

H 3

Block No.
F-26

Winker

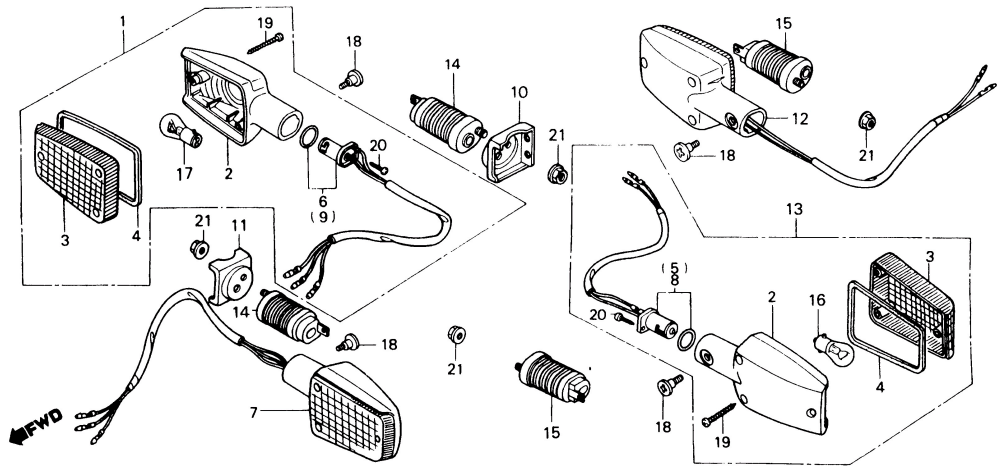

BMG5-29

CB1100F '83

Air cleaner	G 3	Handle lever	E 4
Battery	G 2	Handle pipe	E 7
Brake caliper FR.	F 2	Handle switch	E 4
Brake caliper RR.	F 6	Headlight	E 1
Brake master cylinder FR.	E 6	Ignition coil	H 5
Brake master cylinder RR.	F 5	Meter	E 3
Brake pedal	G 7	Oil cooler	H 6
Cable	E 4	Oil filter	C 3
Cam chain	B 6	Oil pan	C 3
Cam chain tensioner	B 6	Oil pump	C 1
Camshaft	B 4	Piston	C 6
Carburetor (Assy. • Link)	D 1	Regulator	F 12
Carburetor (Component parts)	D 2	Seat	F 11
Chain case	G 11	Side cover	F 12
Change pedal	G 7	Spark unit	F 12
Clutch	B 10	Stand	G 10
Crankcase	C 4	Starting motor	B 12
Crankcase cover L.	B 11	Steering stem	E 9
Crankshaft	C 6	Step	G 8
Cushion RR.	H 1	Stripe	H 10
Cylinder head	B 2	Taillight	H 4
Cylinder head cover	B 1	Tools	H 9
Exhaust muffler	G 5	Top bridge	E 7
Fender FR.	E 10	Transmission	C 10
Fender RR.	H 2	Valve	B 4
Fork FR.	E 11	Wheel FR.	F 4
Fork RR.	G 11	Wheel RR.	F 8
Frame body	H 6	Winker	H 3
Fuel tank	F 10	Wire harness	H 5
Gearshift drum	C 12		
Generator	B 8		

Ref. No.	H/C	Part No.	Description	Reqd. No. '83	Serial No. From	To	Remarks
1	1246362	33400-MB0-671	WINKER ASSY., R. FR. (12V 23/8W)	1			
2	1246388	33401-MA6-621	BASE, WINKER	4			
3	1258334	33402-MA6-013	LENS, WINKER	4			
4	1246404	33406-MA6-003	PACKING, LENS	4			
5	1305986	33410-MA6-003	SOCKET COMP., R. FR. WINKER	1			
6	1246420	33410-MB0-671	SOCKET COMP., R. WINKER	1			
7	1246438	33450-MB0-671	WINKER ASSY., L. FR. (12V 23/8W)	1			
8	1306000	33460-MA6-003	SOCKET COMP., L. FR. WINKER	1			
9	1246461	33460-MB0-671	SOCKET COMP., L. WINKER	1			
10	1305994	33471-MG5-670	BRACKET, R. FR. WINKER	1			
11	1306018	33472-MG5-670	BRACKET, L. FR. WINKER	1			
12	1306026	33600-MG5-670	WINKER ASSY., R. RR. (12V 23W)	1			
13	1306034	33650-MG5-670	WINKER ASSY., L. RR. (12V 23W)	1			
•14	1308683	33690-MB0-700	STAY, WINKER	2			
15	1306042	33690-MG5-670	STAY, WINKER	2			
16	0145318	34905-268-671	BULB, WINKER (12V23W)	2			
17	0824326	34905-425-671	BULB, WINKER (12V23/8W STANLEY)	2			
18	1251321	90380-MA6-000	SCREW, SPECIAL, 6X11	4			
19	1251685	91901-MA6-000	SCREW, TAPPING, 3X25	12			
20	0665174	93901-32320	SCREW, TAPPING, 3X12	4			
21	0471623	94050-06000	NUT, FLANGE, 6MM	4			

CB1100F '83 Frame No.; SC110*DM000001 To Subsequent

© HONDA MOTOR CO., LTD. 1983

Block No.
F-27

Taillight

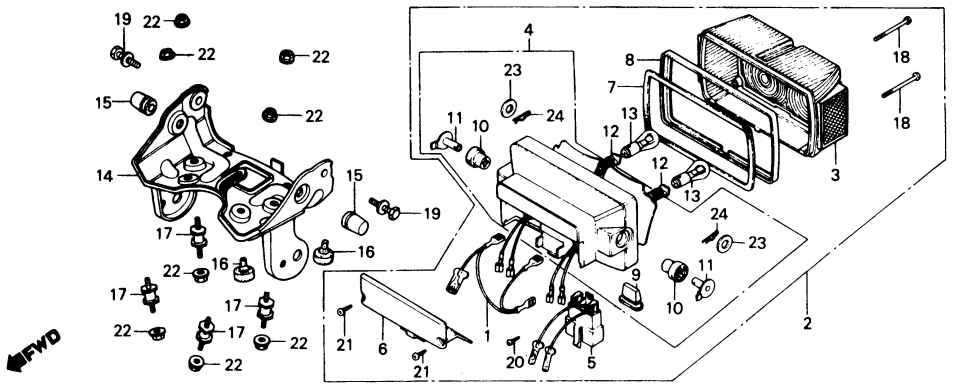

BMG5 – 36

CB1100F '83

Air cleaner	G 3	Handle lever	E 4
Battery	G 2	Handle pipe	E 7
Brake caliper FR.	F 2	Handle switch	E 4
Brake caliper RR.	F 6	Headlight	E 1
Brake master cylinder FR.	E 6	Ignition coil	H 5
Brake master cylinder RR.	F 5	Meter	E 3
Brake pedal	G 7	Oil cooler	H 6
Cable	E 4	Oil filter	C 3
Cam chain	B 6	Oil pan	C 3
Cam chain tensioner	B 6	Oil pump	C 1
Camshaft	B 4	Piston	C 6
Carburetor (Assy. • Link)	D 1	Regulator	F 12
Carburetor (Component parts)	D 2	Seat	F 11
Chain case	G 11	Side cover	F 12
Change pedal	G 7	Spark unit	F 12
Clutch	B 10	Stand	G 10
Crankcase	C 4	Starting motor	B 12
Crankcase cover L.	B 11	Steering stem	E 9
Crankshaft	C 6	Step	G 8
Cushion RR.	H 1	Stripe	H 10
Cylinder head	B 2	Taillight	H 4
Cylinder head cover	B 1	Tools	H 9
Exhaust muffler	G 5	Top bridge	E 7
Fender FR.	E 10	Transmission	C 10
Fender RR.	H 2	Valve	B 4
Fork FR.	E 11	Wheel FR.	F 4
Fork RR.	G 11	Wheel RR.	F 8
Frame body	H 6	Winker	H 3
Fuel tank	F 10	Wire harness	H 5
Gearshift drum	C 12		
Generator	B 8		

Ref. No.	H/C	Part No.	Description	Reqd. No. '83	Serial No. From	To	Remarks
1	0695775	32101-422-003	CORD COMP., EARTH	1			
2	0770990	33701-422-673	TAILLIGHT UNIT (12V 32/3CP)	1			
3	0695791	33702-422-671	LENS, TAILLIGHT	1			
4	0771006	33703-422-673	BASE COMP., TAILLIGHT	1			
5	0695817	33704-422-003	COUPLER COMP.	1			
6	0695825	33708-422-003	COVER, TAILLIGHT	1			
7	0695833	33709-422-003	PACKING, TAILLIGHT LENS	1			
8	0695841	33710-422-003	RIM, TAILLIGHT	1			
9	0771014	33711-422-013	RUBBER, SETTING	1			
10	0700989	33713-422-013	RUBBER B, MOUNTING	2			
11	0700997	33715-422-013	COLLAR, TAILLIGHT MOUNTING	2			
12	0695908	33718-422-003	CORD COMP., TAILLIGHT	2			
13	0273540	34906-341-671	BULB, TAILLIGHT (12V32/3CP)	2			
14	1307248	80103-MG5-670	STAY, TAILLIGHT UNIT	1			
15	1052885	80104-438-000	RUBBER, TAILLIGHT STAY MOUNTING	2			
16	0695536	84104-422-000	RUBBER, RR. COWL CUSHION	2			
17	0765503	85201-438-000	RUBBER, OIL COOLER MOUNTING	4			
18	0465518	90147-147-671	SCREW, TAPPING, 4X60	4			
19	0701003	93495-06020-07	BOLT-WASHER, 6X20	2			
20	0561977	93901-22110	SCREW, TAPPING, 3X8	1			
21	0261875	93901-24210	SCREW, TAPPING, 4X10	2			
22	0471623	94050-06000	NUT, FLANGE, 6MM	8			
23	0701011	94103-08800	WASHER, PLAIN, 8MM	2			
24	0115527	94251-08000	PIN, LOCK, 8MM	2			

CB1100F '83 Frame No.; SC110*DM000001 To Subsequent

© HONDA MOTOR CO., LTD. 1983

H 5

Block No.
F-28

Wire harness • Ignition coil

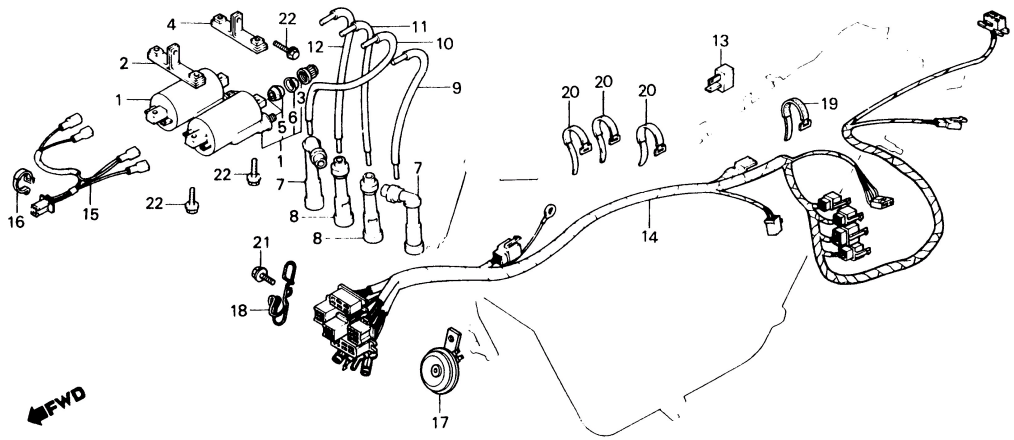

BMG5–30

CB1100F '83

Air cleaner	G 3	Handle lever	E 4
Battery	G 2	Handle pipe	E 7
Brake caliper FR.	F 2	Handle switch	E 4
Brake caliper RR.	F 6	Headlight	E 1
Brake master cylinder FR.	E 6	Ignition coil	H 5
Brake master cylinder RR.	F 5	Meter	E 3
Brake pedal	G 7	Oil cooler	H 6
Cable	E 4	Oil filter	C 3
Cam chain	B 6	Oil pan	C 3
Cam chain tensioner	B 6	Oil pump	C 1
Camshaft	B 4	Piston	C 6
Carburetor (Assy. • Link)	D 1	Regulator	F 12
Carburetor (Component parts)	D 2	Seat	F 11
Chain case	G 11	Side cover	F 12
Change pedal	G 7	Spark unit	F 12
Clutch	B 10	Stand	G 10
Crankcase	C 4	Starting motor	B 12
Crankcase cover L.	B 11	Steering stem	E 9
Crankshaft	C 6	Step	G 8
Cushion RR.	H 1	Stripe	H 10
Cylinder head	B 2	Taillight	H 4
Cylinder head cover	B 1	Tools	H 9
Exhaust muffler	G 5	Top bridge	E 7
Fender FR.	E 10	Transmission	C 10
Fender RR.	H 2	Valve	B 4
Fork FR.	E 11	Wheel FR.	F 4
Fork RR.	G 11	Wheel RR.	F 8
Frame body	H 6	Winker	H 3
Fuel tank	F 10	Wire harness	H 5
Gearshift drum	C 12		
Generator	B 8		

Ref. No.	H/C	Part No.	Description	Reqd. No. '83	Serial No. From	Serial No. To	Remarks
1	1092659	30500-422-013	COIL ASSY., IGNITION	2			
2	0717843	30501-425-000	STAY, IGNITION COIL	1			
3	1094911	30501-428-003	CAP, SCREW	4			
4	0834804	30502-425-770	STAY, IGNITION COIL	1			
5	1094929	30502-428-003	SEAL, RUBBER	4			
6	1094937	30503-428-003	WASHER, CAP	4			
7	0488015	30700-390-153	CAP ASSY. C, NOISE SUPPRESSOR	2			
8	0486746	30710-405-153	CAP ASSY. B, NOISE SUPPRESSOR	2			
9	1092675	30751-425-010	CORD, HIGH TENSION (1-1)	1			
10	1092683	30752-425-010	CORD, HIGH TENSION (2-4)	1			
11	1092691	30753-425-010	CORD, HIGH TENSION (3-2)	1			
12	1092709	30754-425-010	CORD, HIGH TENSION (4-3)	1			
13	0351346	31700-124-003	RECTIFIER ASSY., SILICON (STANLEY)	1			
	0692129	31700-124-008	RECTIFIER ASSY., SILICON (SHINDENGEN)	1			
14	1305853	32100-MG5-670	HARNESS, WIRE	1			
15	1073766	32103-438-660	HARNESS A, SUB WIRE	1			
16	1262989	32161-MA4-670	BAND, WIRE	1			
•17	1385152	38110-MG5-670	HORN COMP. (HIGH)	1			
18	1306612	50174-MB7-611	GUIDE, WIRE HARNESS	1			
19	0255661	95014-61100	BAND A1, WIRE	1			
20	0255679	95014-61200	BAND A2, WIRE	3			
21	0663930	95700-06010-07	BOLT, FLANGE, 6X10	1			
22	0488684	95700-06020-00	BOLT, FLANGE, 6X20	6			

CB1100F '83 Frame No.; SC110*DM000001 To Subsequent

© HONDA MOTOR CO., LTD. 1983

Block No.
F-29

Frame body • Oil cooler

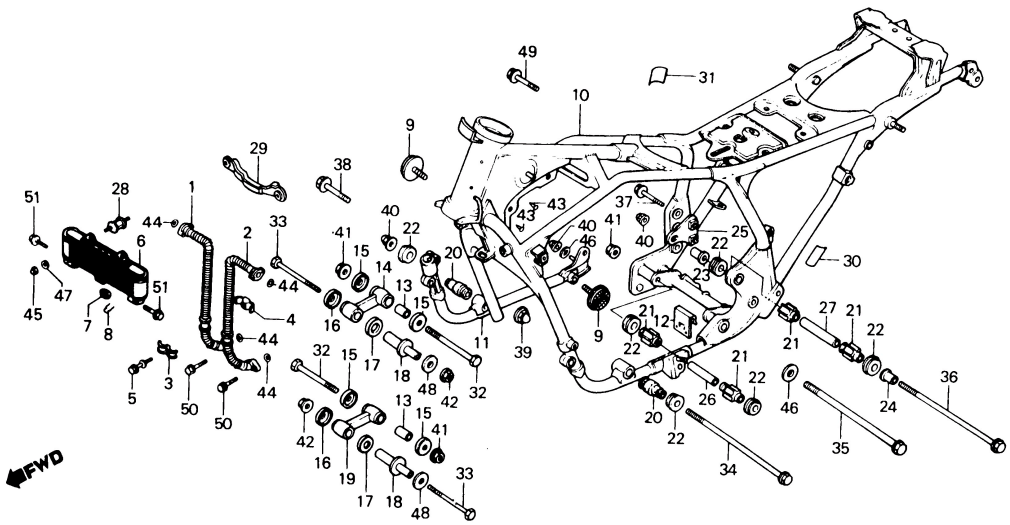

BMG5–31

CB1100F '83

Air cleaner	G 3	Handle lever	E 4
Battery	G 2	Handle pipe	E 7
Brake caliper FR.	F 2	Handle switch	E 4
Brake caliper RR.	F 6	Headlight	E 1
Brake master cylinder FR.	E 6	Ignition coil	H 5
Brake master cylinder RR.	F 5	Meter	E 3
Brake pedal	G 7	Oil cooler	H 6
Cable	E 4	Oil filter	C 3
Cam chain	B 6	Oil pan	C 3
Cam chain tensioner	B 6	Oil pump	C 1
Camshaft	B 4	Piston	C 6
Carburetor (Assy. • Link)	D 1	Regulator	F 12
Carburetor (Component parts)	D 2	Seat	F 11
Chain case	G 11	Side cover	F 12
Change pedal	G 7	Spark unit	F 12
Clutch	B 10	Stand	G 10
Crankcase	C 4	Starting motor	B 12
Crankcase cover L.	B 11	Steering stem	E 9
Crankshaft	C 6	Step	G 8
Cushion RR.	H 1	Stripe	H 10
Cylinder head	B 2	Taillight	H 4
Cylinder head cover	B 1	Tools	H 9
Exhaust muffler	G 5	Top bridge	E 7
Fender FR.	E 10	Transmission	C 10
Fender RR.	H 2	Valve	B 4
Fork FR.	E 11	Wheel FR.	F 4
Fork RR.	G 11	Wheel RR.	F 8
Frame body	H 6	Winker	H 3
Fuel tank	F 10	Wire harness	H 5
Gearshift drum	C 12		
Generator	B 8		

Ref. No.	H/C	Part No.	Description	Reqd. No. '83	Serial No. From	To	Remarks
1	1287994	15510-MG1-000	HOSE COMP., R. OIL	1			
2	1288000	15515-MG1-000	HOSE COMP., L. OIL	1			
3	0926220	15526-438-000	HOLDER A, OIL HOSE	1			
4	0926238	15527-438-000	HOLDER B, OIL HOSE	1			
5	0926253	15529-438-000	BOLT, OIL HOSE HOLDER	1			
6	1305200	15600-MG5-671	COOLER COMP., OIL	1			
7	0926279	15617-438-000	RUBBER, OIL COOLER SETTING	1			
8	0926287	15618-438-000	PIN, OIL COOLER SETTING	1			
9	0494807	33741-413-003	REFLECTOR, FR. REFLEX (STANLEY)	2			
10	1306554	50100-MG5-670ZA	BODY COMP., FRAME *NH-1* (BLACK)	1			
11	1259811	50122-438-670ZB	PIPE, JOINT *NH-1* (BLACK)	1			
12	1306562	50143-MG5-670	SHIM, ENGINE STOPPER (0.5)	1			
	1306570	50144-MG5-670	SHIM, ENGINE STOPPER (1.0)	1			
	1306588	50145-MG5-670	SHIM, ENGINE STOPPER (1.5)	1			
	1306596	50146-MG5-670	SHIM, ENGINE STOPPER (2.0)	1			
	1306604	50147-MG5-670	SHIM, ENGINE STOPPER (2.5)	1			
13	1052307	50184-438-670	COLLAR, PIVOT	2			
14	1052315	50185-438-670	ROD COMP., R. TENSION	1			
15	1052323	50186-438-670	WASHER, PIVOT	4			
16	1052331	50188-438-670	WASHER B, PIVOT	2			
17	1052349	50189-438-670	WASHER C, PIVOT	2			
18	1052356	50191-438-670	COLLAR B, PIVOT	2			
19	1052364	50195-438-670	ROD COMP., L. TENSION	1			
20	1052372	50201-438-670	RUBBER A, MOUNTING	2			
21	0910604	50201-461-000	RUBBER A, ENGINE MOUNTING	4			

CB1100F '83 Frame No.; SC110*DM000001 To Subsequent

© HONDA MOTOR CO., LTD. 1983

Block No.
F-29

Frame body • Oil cooler

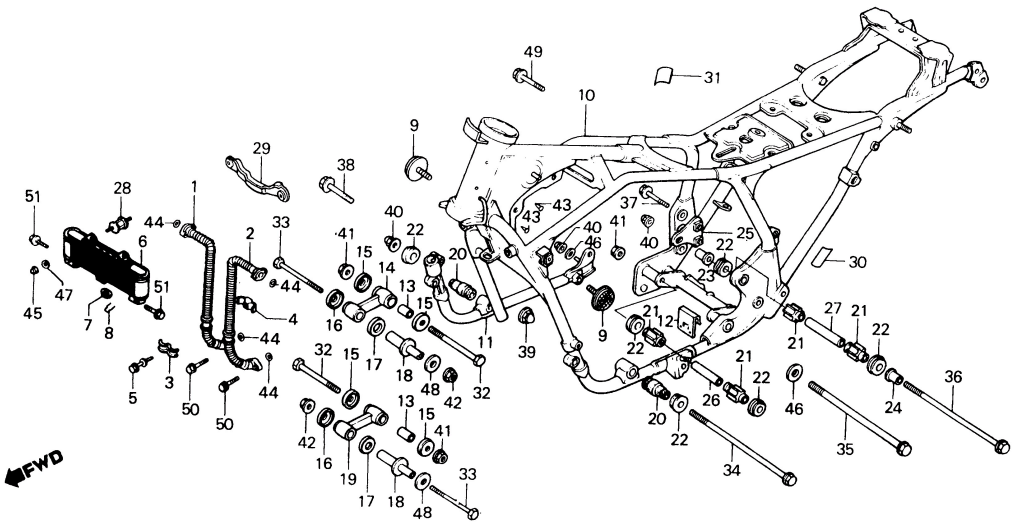

BMG5-31

CB1100F '83

Air cleaner	G 3	Handle lever	E 4
Battery	G 2	Handle pipe	E 7
Brake caliper FR.	F 2	Handle switch	E 4
Brake caliper RR.	F 6	Headlight	E 1
Brake master cylinder FR.	E 6	Ignition coil	H 5
Brake master cylinder RR.	F 5	Meter	E 3
Brake pedal	G 7	Oil cooler	H 6
Cable	E 4	Oil filter	C 3
Cam chain	B 6	Oil pan	C 3
Cam chain tensioner	B 6	Oil pump	C 1
Camshaft	B 4	Piston	C 6
Carburetor (Assy. • Link)	D 1	Regulator	F 12
Carburetor (Component parts)	D 2	Seat	F 11
Chain case	G11	Side cover	F 12
Change pedal	G 7	Spark unit	F 12
Clutch	B10	Stand	G10
Crankcase	C 4	Starting motor	B12
Crankcase cover L.	B11	Steering stem	E 9
Crankshaft	C 6	Step	G 8
Cushion RR.	H 1	Stripe	H10
Cylinder head	B 2	Taillight	H 4
Cylinder head cover	B 1	Tools	H 9
Exhaust muffler	G 5	Top bridge	E 7
Fender FR.	E10	Transmission	C10
Fender RR.	H 2	Valve	B 4
Fork FR.	E11	Wheel FR.	F 4
Fork RR.	G11	Wheel RR.	F 8
Frame body	H 6	Winker	H 3
Fuel tank	F10	Wire harness	H 5
Gearshift drum	C12		
Generator	B 8		

Ref. No.	H/C	Part No.	Description	Reqd. No. '83	Serial No. From	To	Remarks
22	0910620	50203-461-000	RUBBER C, ENGINE MOUNTING	6			
23	1052380	50327-438-670	COLLAR, R. ENGINE MOUNTING	1			
24	1052398	50337-438-670	COLLAR, L. ENGINE MOUNTING	1			
25	1052406	50356-438-670	BRACKET, RR. ENGINE HANGER	1			
26	1052414	50362-438-670	COLLAR B, DISTANCE	1			
27	1052422	50363-438-670	COLLAR C, DISTANCE	1			
28	0765503	85201-438-000	RUBBER, OIL COOLER MOUNTING	2			
29	0911230	85202-461-000	PROTECTOR, WIRE HARNESS	1			
30	0881094	87504-463-670	MARK, MUFFLER CAUTION	1			
31	1310887	87506-MA5-610	MARK, BATTERY CAUTION	1			
32	1053024	90017-438-670	BOLT, HEX., 10X80	2			
33	1311026	90154-MB7-610	BOLT, SPECIAL FLANGE, 8X70	2			
34	1311042	90155-MB7-610	BOLT, ENGINE HANGER, 10X344	1			
35	1053081	90157-438-670	BOLT, ENGINE HANGER, 10X406	1			
36	1311075	90162-MA3-660	BOLT, SPECIAL FLANGE, 10X282	1			
37	1311109	90166-MA3-660	BOLT, FLANGE, 8X55	2			
38	0695221	90176-422-000	BOLT, SPECIAL FLANGE, 10X50	1			
39	0765669	90208-438-000	NUT, FLANGE CAP, 8MM	2			
40	0758524	90210-438-000	NUT, FLANGE CAP, 10MM	3			
41	1023969	90304-GA6-003	NUT, AXLE	3			
42	1001197	90309-428-731	NUT, FLANGE, 8MM	2			
43	0172866	90841-001-000	SCREW, RIVET, 1.5X5	2			
44	0295592	91302-028-000	O-RING, 15X2.5	4			
45	0412387	94021-06070	NUT, CAP, 6MM	2			
46	0059113	94101-10000	WASHER, PLAIN, 10MM	2			
47	0622324	94103-06700	WASHER, PLAIN, 6MM	2			
48	0694000	94103-08200	WASHER, PLAIN, 8MM	2			

CB1100F '83 Frame No.; SC110*DM000001 To Subsequent

© HONDA MOTOR CO., LTD. 1983

Block No.
F-29

Frame body • Oil cooler

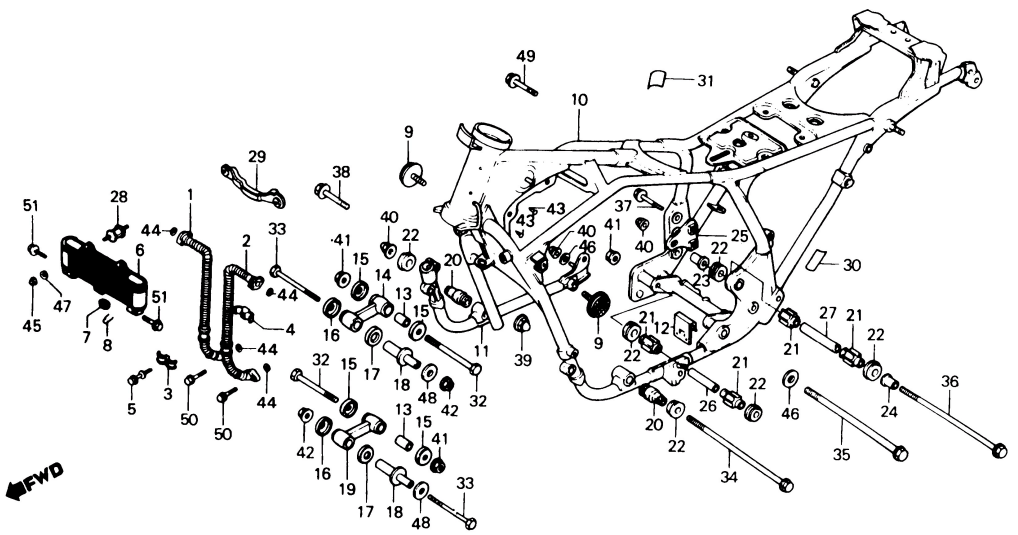

BMG5 – 31

CB1100F '83

Air cleaner	G 3	Handle lever	E 4
Battery	G 2	Handle pipe	E 7
Brake caliper FR.	F 2	Handle switch	E 4
Brake caliper RR.	F 6	Headlight	E 1
Brake master cylinder FR.	E 6	Ignition coil	H 5
Brake master cylinder RR.	F 5	Meter	E 3
Brake pedal	G 7	Oil cooler	H 6
Cable	E 4	Oil filter	C 3
Cam chain	B 6	Oil pan	C 3
Cam chain tensioner	B 6	Oil pump	C 1
Camshaft	B 4	Piston	C 6
Carburetor (Assy. • Link)	D 1	Regulator	F12
Carburetor (Component parts)	D 2	Seat	F11
Chain case	G11	Side cover	F12
Change pedal	G 7	Spark unit	F12
Clutch	B10	Stand	G10
Crankcase	C 4	Starting motor	B12
Crankcase cover L.	B11	Steering stem	E 9
Crankshaft	C 6	Step	G 8
Cushion RR.	H 1	Stripe	H10
Cylinder head	B 2	Taillight	H 4
Cylinder head cover	B 1	Tools	H 9
Exhaust muffler	G 5	Top bridge	E 7
Fender FR.	E10	Transmission	C10
Fender RR.	H 2	Valve	B 4
Fork FR.	E11	Wheel FR.	F 4
Fork RR.	G11	Wheel RR.	F 8
Frame body	H 6	Winker	H 3
Fuel tank	F10	Wire harness	H 5
Gearshift drum	C12		
Generator	B 8		

Ref. No.	H/C	Part No.	Description	Reqd. No. '83	Serial No. From	Serial No. To	Remarks
49	0637090	95700-08022-00	BOLT, FLANGE, 8X22	1			
50	0782862	96000-06025-00	BOLT, FLANGE, 6X25	4			
51	0807362	96000-06035-07	BOLT, FLANGE, 6X35	4			

CB1100F '83 Frame No.; SC110*DM000001 To Subsequent

© HONDA MOTOR CO., LTD. 1983

Block No.
F-30

Tools

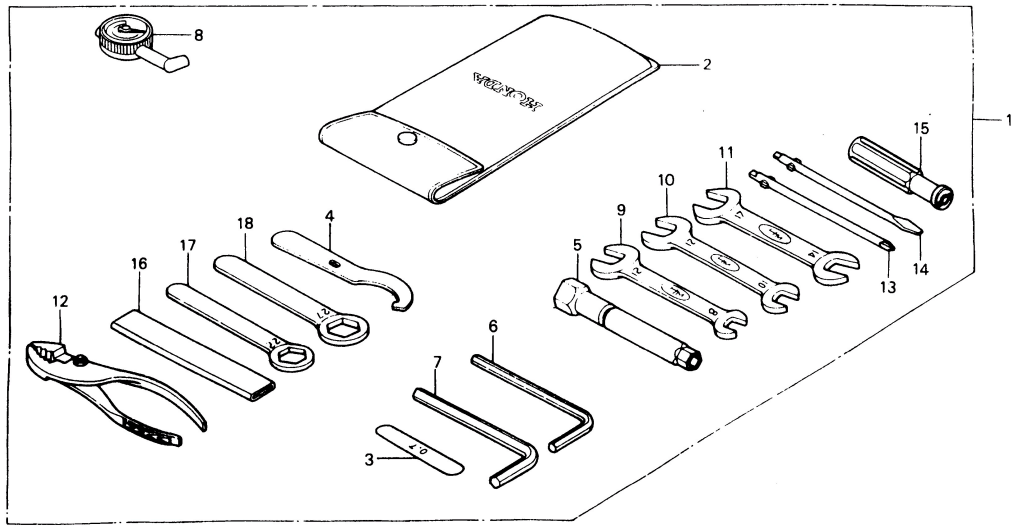

BMG5 – 33

Ref. No.	H/C	Part No.	Description	Reqd. No. '83	Serial No. From	Serial No. To	Remarks
1	1310945	89010-MG5-670	TOOL SET	1			
2	0192369	89101-300-010	BAG, TOOL	1			
3	0443663	89103-371-000	GAUGE, FEELER, 0.7	1			
4	0469445	89215-404-670	SPANNER, PIN	1			
5	0765552	89216-438-000	WRENCH, PLUG	1			
6	1113018	89221-460-840	WRENCH, HEX., 6MM	1			
7	0408724	89222-371-000	WRENCH, HEX., 8MM	1			
8	0918821	89301-461-003	GAUGE, AIR PRESSURE	1			
9	0145649	99001-08120	SPANNER, 8X12	1			
10	0187559	99001-10120	SPANNER, 10X12	1			
11	0187567	99001-14170	SPANNER, 14X17	1			
12	0069252	99002-13500	PLIERS, 135	1			
13	0052423	99003-10000	DRIVER 2, PLUS SCREW	1			
14	0052449	99003-30000	DRIVER 2, MINUS SCREW	1			
15	0052464	99003-50000	GRIP	1			
16	0270496	99006-12000	HANDLE, EYE WRENCH, 120MM	1			
17	0268227	99006-22000	WRENCH, EYE, 22MM	1			
18	1311539	99006-27000	WRENCH, EYE, 27MM	1			

CB1100F '83

Air cleaner	G 3	Handle lever	E 4
Battery	G 2	Handle pipe	E 7
Brake caliper FR.	F 2	Handle switch	E 4
Brake caliper RR.	F 6	Headlight	E 1
Brake master cylinder FR.	E 6	Ignition coil	H 5
Brake master cylinder RR.	F 5	Meter	E 3
Brake pedal	G 7	Oil cooler	H 6
Cable	E 4	Oil filter	C 3
Cam chain	B 6	Oil pan	C 3
Cam chain tensioner	B 6	Oil pump	C 1
Camshaft	B 4	Piston	C 6
Carburetor (Assy. • Link)	D 1	Regulator	F 12
Carburetor (Component parts)	D 2	Seat	F 11
Chain case	G11	Side cover	F 12
Change pedal	G 7	Spark unit	F 12
Clutch	B10	Stand	G10
Crankcase	C 4	Starting motor	B12
Crankcase cover L.	B11	Steering stem	E 9
Crankshaft	C 6	Step	G 8
Cushion RR.	H 1	Stripe	H10
Cylinder head	B 2	Taillight	H 4
Cylinder head cover	B 1	Tools	H 9
Exhaust muffler	G 5	Top bridge	E 7
Fender FR.	E10	Transmission	C10
Fender RR.	H 2	Valve	B 4
Fork FR.	E11	Wheel FR.	F 4
Fork RR.	G11	Wheel RR.	F 8
Frame body	H 6	Winker	H 3
Fuel tank	F10	Wire harness	H 5
Gearshift drum	C12		
Generator	B 8		

CB1100F '83 Frame No.; SC110*DM000001 To Subsequent

© HONDA MOTOR CO., LTD. 1983

H 10

Block No.
F-31

Stripe

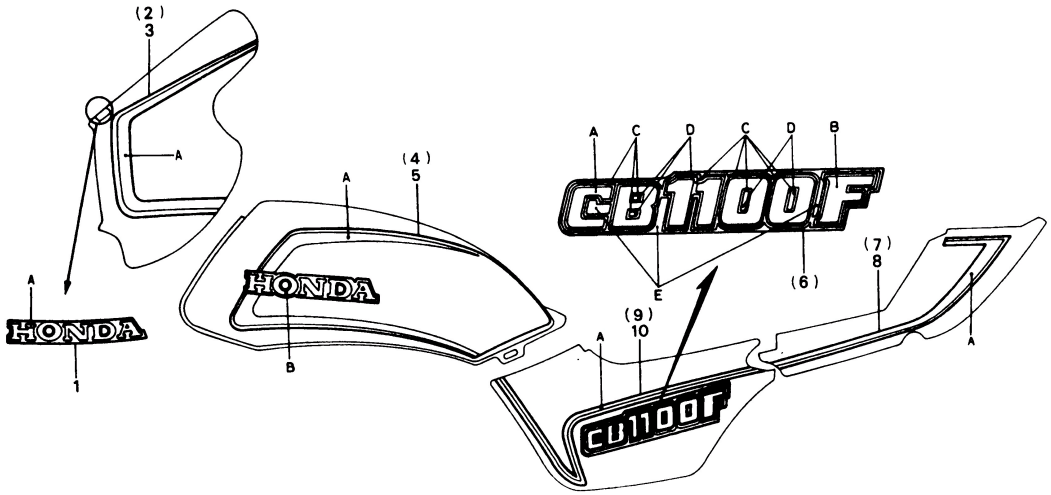

CB1100F '83

Air cleaner	G 3	Handle lever	E 4
Battery	G 2	Handle pipe	E 7
Brake caliper FR.	F 2	Handle switch	E 4
Brake caliper RR.	F 6	Headlight	E 1
Brake master cylinder FR.	E 6	Ignition coil	H 5
Brake master cylinder RR.	F 5	Meter	E 3
Brake pedal	G 7	Oil cooler	H 6
Cable	E 4	Oil filter	C 3
Cam chain	B 6	Oil pan	C 3
Cam chain tensioner	B 6	Oil pump	C 1
Camshaft	B 4	Piston	C 6
Carburetor (Assy. • Link)	D 1	Regulator	F12
Carburetor (Component parts)	D 2	Seat	F11
Chain case	G11	Side cover	F12
Change pedal	G 7	Spark unit	F12
Clutch	B10	Stand	G10
Crankcase	C 4	Starting motor	B12
Crankcase cover L.	B11	Steering stem	E 9
Crankshaft	C 6	Step	G 8
Cushion RR.	H 1	Stripe	H10
Cylinder head	B 2	Taillight	H 4
Cylinder head cover	B 1	Tools	H 9
Exhaust muffler	G 5	Top bridge	E 7
Fender FR.	E10	Transmission	C10
Fender RR.	H 2	Valve	B 4
Fork FR.	E11	Wheel FR.	F 4
Fork RR.	G11	Wheel RR.	F 8
Frame body	H 6	Winker	H 3
Fuel tank	F10	Wire harness	H 5
Gearshift drum	C12		
Generator	B 8		

Ref. No.	H/C	Part No.	Description	Reqd. No. '83	Serial No. From	Serial No. To	Remarks
1	1307354	87116-MG5-670ZA	MARK, HEADLIGHT COVER (A.M.) *TYPE-1*	1			
2	1307370	87118-MG5-670ZA	STRIPE, R. HEADLIGHT COVER (A.M.) *TYPE-1*	1			
	1307388	87118-MG5-670ZB	STRIPE, R. HEADLIGHT COVER (A.M.) *TYPE-2*	1			
3	1310630	87119-MG5-670ZA	STRIPE, L. HEADLIGHT COVER (A.M.) *TYPE-1*	1			
	1310648	87119-MG5-670ZB	STRIPE, L. HEADLIGHT COVER (A.M.) *TYPE-2*	1			
4	1310663	87121-MC3-700ZA	STRIPE, R. FUEL TANK (A.M.) *TYPE-1*	1			
	1310671	87121-MC3-700ZB	STRIPE, R. FUEL TANK (A.M.) *TYPE-2*	1			
5	1310697	87122-MC3-700ZA	STRIPE, L. FUEL TANK (A.M.) *TYPE-1*	1			
	1310705	87122-MC3-700ZB	STRIPE, L. FUEL TANK (A.M.) *TYPE-2*	1			
* 6	1310721	87124-MG5-670ZA	MARK, SIDE COVER (A.M.) *TYPE-1*	2			
*	1310739	87124-MG5-670ZB	MARK, SIDE COVER (A.M.) *TYPE-2*	2			
7	1310754	87125-MC3-700ZA	STRIPE, R. RR. COWL (A.M.) *TYPE-1*	1			
	1310762	87125-MC3-700ZB	STRIPE, R. RR. COWL (A.M.) *TYPE-2*	1			
8	1310788	87126-MC3-700ZA	STRIPE, L. RR. COWL (A.M.) *TYPE-1*	1			
	1310796	87126-MC3-700ZB	STRIPE, L. RR. COWL (A.M.) *TYPE-2*	1			

Color chart for side cover mark

Type of mark	Main color	Position				
		A	B	C	D	E
Type-1	R-125C-A (Candy pearl maui red)	Black	Red	White	Black	R-125C-A
Type-2	PB-126C-A (Candy pearl kapiolani blue)	Black	Pearl red	White	Black	PB-126C-A

Color chart for stripe (Fuel tank stripe)

Type of stripe	Main color	Position	
		A	B
Type-1	R-125C-A (Candy pearl maui red)	Black	Pearl red
Type-2	PB-125C-A (Candy pearl kapiolani blue)	Pearl red	Black

CB1100F '83 Frame No.; SC110*DM000001 To Subsequent

© HONDA MOTOR CO., LTD. 1983

Block No.
F-31

Stripe

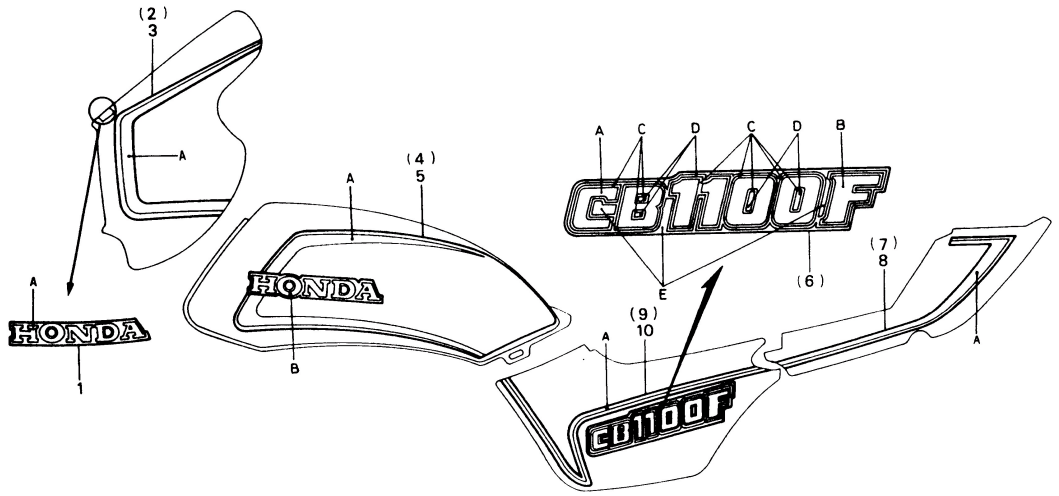

BMG5–32

Ref. No.	H/C	Part No.	Description	Reqd. No. '83	Serial No. From	Serial No. To	Remarks
9	1310812	87128-MC3-700ZA	STRIPE, R. SIDE COVER (A.M.) *TYPE-1*	1			
	1310820	87128-MC3-700ZB	STRIPE, R. SIDE COVER (A.M.) *TYPE-2*	1			
10	1310846	87129-MC3-700ZA	STRIPE, L. SIDE COVER (A.M.) *TYPE-1*	1			
	1310853	87129-MC3-700ZB	STRIPE, L. SIDE COVER (A.M.) *TYPE-2*	1			

Color chart for stripe (Headlight cover stripe / Side cover stripe / Rear cowl stripe)

Type of stripe	Main color	Position A
Type–1	R–125C–A (Candy pearl maui red)	Black
Type–2	PB–126C–A (Candy pearl kapiolani blue)	Pearl red

CB1100F '83

Air cleaner	G 3	Handle lever	E 4
Battery	G 2	Handle pipe	E 7
Brake caliper FR.	F 2	Handle switch	E 4
Brake caliper RR.	F 6	Headlight	E 1
Brake master cylinder FR.	E 6	Ignition coil	H 5
Brake master cylinder RR.	F 5	Meter	E 3
Brake pedal	G 7	Oil cooler	H 6
Cable	E 4	Oil filter	C 3
Cam chain	B 6	Oil pan	C 3
Cam chain tensioner	B 6	Oil pump	C 1
Camshaft	B 4	Piston	C 6
Carburetor (Assy. • Link)	D 1	Regulator	F12
Carburetor (Component parts)	D 2	Seat	F11
Chain case	G11	Side cover	F12
Change pedal	G 7	Spark unit	F12
Clutch	B10	Stand	G10
Crankcase	C 4	Starting motor	B12
Crankcase cover L.	B11	Steering stem	E 9
Crankshaft	C 6	Step	G 8
Cushion RR.	H 1	Stripe	H10
Cylinder head	B 2	Taillight	H 4
Cylinder head cover	B 1	Tools	H 9
Exhaust muffler	G 5	Top bridge	E 7
Fender FR.	E10	Transmission	C10
Fender RR.	H 2	Valve	B 4
Fork FR.	E11	Wheel FR.	F 4
Fork RR.	G11	Wheel RR.	F 8
Frame body	H 6	Winker	H 3
Fuel tank	F10	Wire harness	H 5
Gearshift drum	C12		
Generator	B 8		

CB1100F '83 Frame No.; SC110*DM000001 To Subsequent

© HONDA MOTOR CO., LTD. 1983

L 10

PART NO. INDEX

Part No.	Address No.
06000	
061A1-MG5-000	D4
061B1-MG5-000	D5
11000	
11000-MG5-670	C4
11210-438-670	C3
11330-MG5-670	B9
11341-461-750	B11
11350-438-670	C1
11355-MG5-670	C1
11357-MG5-670	C1
11359-425-020	C1
	D5
11361-438-670	C1
11363-MA5-000	C1
11364-425-000	C1
11365-MA5-000	C1
11366-MG5-670	C1
11367-MG5-670	C1
11368-MA5-000	C1
11395-425-000	B11
	D5
11396-425-000	B9
	D5
11398-425-000	C3
	D5
11615-438-670	C1
11618-MA3-000	C4
11620-425-000	C4
11631-MG5-670	B8
11691-425-010	B8
	D5
12000	
12010-MG5-670	B2
12010-MG5-671	B2
12100-MG5-670	B7
12191-MG5-670	B7
	D4
12204-461-305	B2
12206-MG5-305	B2
12209-422-005	B4
	D4
12213-425-305	B2
12230-425-000	B2
12241-425-000	B2
12242-425-000	B2
12251-MG5-670	B2
	D4
12310-461-000	B1
12331-425-000	B1
12361-035-000	C4
12391-425-010	B1
	D4
12432-425-000	B1
12435-425-000	B1
13000	
13000-MA3-000	C6
13011-MG5-004	C6
13021-MG5-004	C6
13031-MG5-004	C6
13041-MG5-004	C6
13051-MG5-004	C6
13101-MG5-670	C6
13102-MG5-670	C6
13103-MG5-670	C6
13104-MG5-670	C6
13105-MG5-670	C6
13111-MA3-000	C6
13201-MA3-000	C6
13202-MA3-000	C6
13203-MA3-000	C6
13204-MA3-000	C6
13205-MA3-000	C6
13205-689-004	C6
13213-463-003	C6
13215-MG5-003	C6
13216-MG5-003	C6
13217-MG5-003	C6
13218-MG5-003	C6
13219-MG5-003	C6
13315-MA3-003	C6
13316-MA3-003	C6
13317-MA3-003	C7
13318-MA3-003	C7
13319-MA3-003	C7
13610-MA3-003	C8
14000	
14100-MG5-670	B4
14200-MG5-670	B4
14321-MA3-000	B6
14322-MA3-000	B6
14401-MA3-003	B6
14402-MA3-003	B6
14500-MG1-670	B6
14518-MA3-620	B6
14519-MA3-620	B6
14521-438-000	B6
14530-MG5-670	B6
14538-MG5-670	B6
14539-MG5-670	B6
14541-MA3-000	B6
14620-MA3-000	B6
14711-438-000	B4
14721-438-000	B4
14731-MA3-000	B4
14751-MA3-003	B4
14761-MA3-003	B4
14771-329-000	B4
14775-422-000	B4
14776-422-000	B4
14781-107-003	B4
14901-422-000	B4
14903-422-000	B4
14905-422-000	B4
14907-422-000	B4
14909-422-000	B4
14911-422-000	B4
14913-422-000	B4
14915-422-000	B4
14917-422-000	B4
14919-422-000	B4
14921-422-000	B4
14923-422-000	B4
14925-422-000	B4
14927-422-000	B4
14929-422-000	B4
14931-422-000	B4
14933-422-000	B4
14935-422-000	B4
14937-422-000	B5
14939-422-000	B5
14941-422-000	B5
14943-422-000	B5
14945-422-000	B5
14947-422-000	B5
14949-422-000	B5
15000	
15100-438-003	C1
15153-425-000	C3
15154-425-000	C3
15211-425-000	C8
15231-634-010	C3
15232-MA3-000	C3
15233-634-000	C3
15311-438-010	C3
15331-300-000	C4
15336-393-000	C4
15410-426-010	C3
15411-438-670	C3
15414-300-000	C3
15415-300-000	C3
15420-300-020	C3
15422-425-010	C3
15510-MG1-000	H6
15515-MG1-000	H6
15520-438-000	B2
15526-438-000	H6
15527-438-000	H6
15528-MG5-670	B7
15529-438-000	H6
15531-425-010	B2
15532-425-010	B2
15600-MG5-671	H6
15617-438-000	H6
15618-438-000	H6
15650-425-000	C1
15710-438-000	C8
15771-551-000	C1
15771-703-000	C1
16000	
16010-MG5-671	D2
16012-MG5-671	D2
16013-413-751	D2
16015-413-004	D2
16016-413-751	D2
16017-438-405	D1
16018-438-405	D1
16019-443-851	D1
16020-MG5-671	D1
16021-MG1-671	D2
16022-413-891	D2
16023-425-671	D2
16027-438-671	D1
16028-425-671	D1
16029-413-004	D2
16035-425-671	D1
16036-425-671	D1
16044-425-771	D2
16045-425-671	D2
16048-KB7-004	D2
16050-415-003	D2
16051-413-004	D1
16080-461-751	F10
16081-471-831	F10
16100-MG5-671	D1
16101-MG5-305	D1
16102-MG5-305	D1
16103-MG5-305	D1
16104-MG5-305	D1
16119-425-672	D1
16144-413-751	D2
16155-413-751	D2
16165-438-003	D2
16195-449-771	D2
16198-425-671	D2
16199-425-671	D1
16211-438-000	B2
16212-438-000	B2
16213-438-000	B2
16214-438-000	B2
16219-422-000	B2
16291-300-300	D2
16876-671-650	D3
16950-461-751	F10
16951-461-751	F10
16952-461-751	F10
16959-461-751	F10
16970-MG1-671	D3
16971-MG1-671	D3
16971-461-771	D3
16972-461-771	D3
16973-461-771	D3
16974-461-771	D3
16990-461-750	D3
17000	
17211-425-000	G3
17213-MA3-660	G3
17217-MG5-670	G3
17222-438-000	G3
17223-425-000	G3
17230-438-000	G3
17231-438-000	G3
17240-MA3-000	G3
17241-MA3-660	G3
17245-107-010	E1
17247-303-000	G2
17251-438-000	G3
17252-438-000	G3
17253-438-000	G3
17254-438-000	G3
17255-371-000	B2
17256-425-010	G3
17300-MG5-670	G3
17316-611-000	C1
	G3
17370-419-700	G3
17375-425-000	G3
175A1-MG5-670ZA	F10
175A1-MG5-670ZB	F10
17530-422-017	F10
17611-425-000	F10
17613-MB7-670	F10
17620-469-000	F10
17632-469-000	F10
17908-MG5-670	E7
17909-MG5-670	E7
17910-MG5-670	E4
17920-MG5-670	E4
17950-MG5-670	E4
17963-422-000	E4
17964-MA2-000	E4
18000	
18231-425-000	G5
18233-425-000	G5
18291-254-000	D4
18315-MG5-670	G5
18315-MG5-671	G5
18316-438-670	G5
18320-MG5-670	G5
18325-MG5-670	G5
18325-MG5-671	G5
18330-MG5-670	G5
18345-MG5-670	G5
18355-MG5-670	G5
18372-MG5-670	G5
18373-MG5-670	G5
18374-MG5-670	G5
18391-438-000	G5
18391-461-000	G5
18416-438-670	G5
18421-438-670	G8
18422-438-000	G8
22000	
22100-MG5-670	B10
22120-MG5-670	B10
22201-425-000	B10
22202-425-000	B10
22321-425-000	B10
22322-425-000	B10
22350-425-000	B10
22361-MG1-670	B10
22401-MG5-670	B10
22710-MG5-670	B9
22815-MG5-670	B9
22843-MG5-670	B10
22850-MG5-670	B9
22870-MG5-670	E4
23000	
23103-MG5-670	C8
23105-MG5-670	C8
23110-MG5-670	C8
23112-MA3-300	C8
23114-425-300	C8
23115-MA3-300	C8
23123-MG5-670	C8
23124-425-300	C8
23125-MG5-670	C8
23132-393-000	C8
23160-MA3-010	C8
23167-422-010	C8
23168-425-000	C8
23175-425-000	C8
23180-425-000	C8
23182-425-000	C8
23211-MG5-670	C10
23220-MA3-000	C10
23411-425-000	C10
23422-425-000	C10
23431-MG5-670	C10
23451-MG5-670	C10
23461-MA3-000	C10
23465-MA3-000	C10
23471-MA3-000	C10
23481-MA3-000	C10
23491-MG5-670	C10
23495-422-000	C10
23501-MG5-670	C10
23801-438-000	C10
23820-438-003	C10
23821-460-000	C10
24000	
24211-425-010	C12
24221-MG1-670	C12
24231-MG1-670	C12
24261-283-000	C10
24261-425-000	C12
24300-425-030	C12
24303-425-310	C12
24304-425-300	C12
24307-425-000	C12
24310-425-000	C12
24430-413-000	C12
24432-425-000	C12
24435-425-000	C12
24444-300-000	C8
24610-425-010	C12
24641-425-000	C12
24651-425-000	C12
24652-028-000	C12
24701-MC3-670	G7
24781-419-000	G7
27000	
27611-393-000	C8
27621-393-000	C8
28000	
28101-MA3-000	B12
28106-425-000	B12
28110-MA3-000	B12
28120-425-000	B12
28125-516-030	B12
28126-415-000	B12
28130-MA3-000	B12
30000	
30220-MG5-154	B11
30228-MA3-000	B11
30300-MG5-000	B11
30371-MG5-670	B11
30372-425-000	B11
	D5
30400-MA4-601	F12
30400-461-155	F12
30500-422-013	H5
30501-425-000	H5
30501-428-003	H5
30502-425-770	H5
30502-428-003	H5
30503-428-003	H5
30700-390-153	H5
30710-405-153	H5
30751-425-010	H5
30752-425-010	H5
30753-425-010	H5
30754-425-010	H5
30905-216-000	C8
31000	
31100-MG5-005	B8
31110-MG5-005	B8
31120-MG5-005	B8
31124-MG5-000	B8
31125-MG5-005	B8
31126-422-015	B8
31200-438-018	B12
31201-292-158	B12
31204-292-158	B12
31205-413-780	B12
31206-286-158	B12
31280-438-670	B12
31282-425-300	B12
31500-461-771	G2
31600-MG5-000	F12
31700-124-003	H5
31700-124-008	H5
32000	
32100-MG5-670	H5
32101-422-003	H4
32103-438-660	H5
32116-425-000	B11
32161-MA4-670	H5
32161-404-000	E4
32401-425-010	F12
32402-425-000	B12
32411-253-000	B12
32412-425-000	F12
32414-425-000	F12
32415-425-000	F12
32416-425-000	B12
32601-438-000	G2
32602-438-000	G2
32900-438-000	C4
32901-MA1-000	E1
33000	
33100-MG5-671	E1
33103-MG2-671	E1
33108-MB0-003	E1
33114-MC5-003	E1
33118-438-841	E1
33119-371-003	E1
33120-MG5-671	E1
33121-MC5-003	E1
33128-438-841	E1
33136-426-830	E1
33153-MC5-003	E1
33154-MC5-003	E1
33156-MC5-003	E1
33171-MC5-000	E1
33180-MC5-003	E1
33400-MB0-671	H3
33401-MA6-621	H3
33402-MA6-013	H3
33406-MA6-003	H3
33410-MA6-003	H3
33410-MB0-671	H3
33450-MB0-671	H3
33460-MA6-003	H3
33460-MB0-671	H3

© HONDA MOTOR CO., LTD. 1983

L 11

PART NO. INDEX

Part No.	Address No.
33471-MG5-670	H3
33472-MG5-670	H3
33600-MG5-670	H3
33650-MG5-670	H3
33690-MB0-700	H3
33690-MG5-670	H3
33701-422-673	H4
33702-422-671	H4
33703-422-673	H4
33704-422-003	H4
33708-422-003	H4
33709-422-003	H4
33710-422-003	H4
33711-422-013	H4
33713-422-013	H4
33715-422-013	H4
33718-422-003	H4
33741-413-003	H6
34000	
34901-MC7-601	E1
34905-268-671	H3
34905-425-671	H3
34906-341-671	H4
34908-GA7-701	E3
35000	
35010-MG5-670	E7
35100-MA6-007	E7
35101-MA6-007	E7
35121-MA6-811	E7
35122-MA6-811	E7
35130-MG5-670	E4
35200-MG5-670	E4
35330-413-003	E4
35340-MA5-671	E6
35350-438-000	G7
35357-425-610	G7
35500-MB9-004	B12
35600-425-003	C1
35610-425-000	C1
35850-MB0-007	F12
35851-MA3-660	F12
35852-MB0-007	F12
35856-MB0-007	F12
37000	
37100-MG5-671	E3
37101-MG5-008	E3
37102-MC5-008	E3
37103-MG5-008	E3
37105-MG5-008	E3
37110-MC5-008	E3
37200-MG5-671	E3
37204-MC7-611	E3
37250-MG5-671	E3
37260-MG5-670	E3
37261-MG5-670	E3
38000	
38110-MG5-670	H5
38200-MA4-671	E7
38215-MG5-670	E7
38301-MB0-004	F12
38306-438-000	F12
40000	
405A3-MG5-003	G11
405A3-MG5-005	G11
40510-MG5-670	G11
40515-413-000	G8
41000	
41200-MG5-670	F8
41241-422-000	F8
42000	
42301-MG5-670	F8
42311-MG5-670	F8
42313-422-000	F8
42604-438-710	F8
42605-393-000	F8
42610-MG5-670	F8
42620-422-010	F8
42650-MG5-670	F8
42704-MB0-000	F4
42705-MB0-000	F4
42706-MB0-000	F4
42710-MG5-671	F8
42710-MG5-672	F8
42753-425-003	F4
42753-425-004	F4
43000	
43100-MG5-671	F6
43100-MG5-672	F6
43101-MA3-006	F6
43105-MC7-007	F6
43105-MC7-014	F6
43107-MA3-006	F6
43109-MA3-006	F6
43110-MG5-671	F6
43140-MA3-000	F6
43209-MA3-006	F6
43310-MG5-671	F5
43351-MG5-670	F8
43352-568-003	F2
43352-568-003	F6
43353-461-771	F2
43353-461-771	F6
43431-425-700	F6
43435-392-000	F6
43500-MG5-671	F5
43503-422-006	F5
43504-371-013	F5
43511-461-006	F5
43512-MG5-671	F5
43513-461-771	F5
43514-445-771	F5
43520-461-771	F5
43530-461-771	F5
44000	
44301-MG5-670	F4
44311-461-770	F4
44620-MB0-000	F4
44650-MB0-315	F4
44680-410-000	F4
44710-MG5-671	F4
44710-MG5-672	F4
44800-MG5-671	F4
44806-MC1-771	F4
44809-402-000	F4
44830-MG5-670	E3
44831-MG5-670	E3
44832-MA3-000	F2
45000	
45100-MB7-612	F2
45100-MB7-613	F2
45101-MA3-006	F2
45105-MC7-007	F2
45105-MC7-014	F2
45107-MA3-006	F2
45108-MA3-006	F2
45109-166-006	F2
45110-MB7-611	F2
45111-MA3-006	F2
45112-445-631	F2
45113-MB7-610	F2
45114-MB7-610	F2
45124-MG5-671	E6
45125-MG5-671	E6
45126-MG5-671	E6
45127-422-003	E6
45128-ME2-003	F4
45131-MA3-006	F2
45133-MA3-006	F6
45133-166-016	F2
45200-MB7-612	F6
45200-MB7-613	F2
45201-MA3-006	F2
45209-166-006	F6
45210-MB7-611	F6
45215-MA3-006	F6
45217-MA3-006	F5
45251-MG5-670	F5
45351-MG5-670	F5
45451-471-000	F5
45500-MA7-006	F5
45512-MA6-006	E6
45513-MA5-671	E6
45517-MA5-671	E6
45520-MA5-671	E6
45520-300-000	F5
45521-300-010	F5
45522-422-000	E6
45530-MA5-671	E6
46000	
46182-500-013	F5
46500-MC3-670	G7
46503-371-000	F5
46504-445-771	F5
46514-445-670	G7
46515-445-670	G7
50000	
50100-MG5-670ZA	H6
50122-438-670ZB	H6
50143-MG5-670	H6
50144-MG5-670	H6
50145-MG5-670	H6
50146-MG5-670	H6
50147-MG5-670	H6
50174-MB7-611	H5
50184-438-670	H6
50185-438-670	H6
50186-438-670	H6
50188-438-670	H6
50189-438-670	H6
50191-438-670	H6
50195-438-670	H6
50201-438-670	H6
50201-461-000	H6
50203-461-000	H7
50320-MG5-670	G2
50324-425-010	G2
50327-MG5-670	G2
50327-438-670	H7
50328-MG5-670	G2
50328-425-000	G2
50329-425-000	G2
50334-461-770	G2
50337-438-670	H7
50356-438-670	H7
50362-438-670	H7
50363-438-670	H7
50500-438-730	G10
50523-425-000	G10
50526-300-000	G10
50527-425-000	G10
50540-438-010	G10
50541-445-010	G10
50548-356-700	G10
50548-438-000	G10
50549-356-700	G10
50549-438-000	G10
50603-033-000	G8
50610-MG5-670	G8
50612-MB0-000	G8
50615-MG5-670	G8
50617-195-000	G8
50618-MB0-000	G8
50619-MB0-000	G8
50620-MG5-670	G8
50630-MG5-670	G8
50640-MG5-670	G8
50642-MB0-000	G8
50643-MG5-670	G8
50661-MB0-000	G8
50710-371-007	F11
50711-MB0-000	G8
50712-MB0-000	G8
50714-MB0-000	G8
50715-MB0-000	G8
51000	
51400-MG5-671	E11
51401-MG5-671	E11
51402-MB7-611	E11
51403-MB7-611	E11
51404-MB7-611	E11
51405-MB7-611	E11
51410-MG5-671	E11
51411-463-003	E11
51412-463-305	E11
51414-463-003	E11
51415-463-003	E11
51417-MC7-003	E11
51418-MC7-013	E11
51421-MG5-671	E11
51423-MC7-003	E11
51430-MB7-611	E11
51432-MG5-671	E11
51433-MC7-003	E11
51434-MC7-003	E11
51435-MC7-003	E11
51436-MA3-661	E11
51437-463-003	E11
51438-MB9-781	E11
51439-MB9-781	E11
51440-MG5-671	E11
51441-MC7-003	E11
51442-MC7-003	E11
51443-MC7-013	E12
51444-MC7-013	E12
51445-MC7-003	E12
51447-463-003	E12
51454-MG5-671	E12
51456-469-013	E12
51457-469-000	E12
51458-MG5-671	E12
51490-MB9-781	E12
51496-MC7-670	E12
51500-MG5-671	E12
51521-MG5-671	E12
51530-MB7-611	E12
51634-410-003	E12
52000	
52100-MG5-670ZA	G11
52108-425-831	G11
52108-425-832	G11
52109-425-831	G11
52120-MG5-670	G11
52121-MG5-670	G11
52141-425-830	G11
52144-425-831	G11
52170-MG5-670	G11
52400-MG5-671	H1
52401-438-612	H1
52402-MG5-671	H1
52410-MG5-671	H1
52422-422-003	H1
52451-357-000	G11
52451-422-611	H1
52452-MG5-671	H1
52484-292-000	H1
52500-MG5-671	H1
52510-MG5-671	H1
52758-438-670	H1
52759-438-670	H1
53000	
53100-MG5-670	E7
53101-MG5-670	E7
53131-MG5-670	E7
53134-MG5-671	E12
53135-MG5-671	E12
53136-MG5-671	E12
53137-MG5-671	E12
53138-MG5-671	E12
53139-MG5-671	E12
53141-300-010	E4
53150-MG5-670	E7
53165-390-780	E4
53166-390-780	E4
53170-MA2-000	E4
53175-MA6-006	E6
53178-422-020	E4
53180-422-020	E4
53192-422-000	E4
53200-MG5-670	E9
53205-MG5-670	E7
53214-371-010	E9
53220-460-840	E9
53223-371-010	E9
53230-MG5-670	E7
53240-MG5-670	E12
61000	
61100-MG5-670ZA	E10
61100-MG5-670ZB	E10
61101-441-000	E10
61102-MB7-610	F3
61104-422-000	E1
61311-MG5-670	E1
61312-MG5-670	E9
61313-422-000	E1
64000	
64100-MC5-610	E1
64200-MG5-670ZA	E1
64200-MG5-670ZB	E2
64203-166-610	G2
64511-MG5-670	E2
64513-MC5-000	E2
77000	
77100-445-841	F11
77121-438-000	F11
77130-438-000	F11
77131-438-000	F11
77140-438-000	F11
77203-438-000	F11
77205-286-000	F11
77210-MG5-670ZA	F11
77210-MG5-670ZB	F11
77211-438-000	F11
80000	
80100-445-671ZA	H2
80103-MG5-670	H4
80104-438-000	H4
80105-MG5-670	H2
80110-147-000	H2
83000	
83551-300-000	F12
83606-356-000	G2
83630-MG5-670ZA	F12
83630-MG5-670ZB	F12
83642-355-000	F12
83730-MG5-670ZA	F12
83730-MG5-670ZB	F12
84000	
84100-MG5-670	H2
84104-422-000	H4
84200-MG5-670	H2
85000	
85201-438-000	H4
	H7
85202-461-000	H7
87000	
87116-MG5-670ZA	H10
87118-MG5-670ZA	H10
87118-MG5-670ZB	H10
87119-MG5-670ZA	H10
87119-MG5-670ZB	H10
87121-MC3-700ZA	H10
87121-MC3-700ZB	H10
87122-MC3-700ZA	H10
87122-MC3-700ZB	H10
87124-MG5-670ZA	H10
87124-MG5-670ZB	H10
87125-MC3-700ZA	H10
87125-MC3-700ZB	H10
87126-MC3-700ZA	H10
87126-MC3-700ZB	H10
87127-438-300	F11
87128-MC3-700ZA	H11
87128-MC3-700ZB	H11
87129-MC3-700ZA	H11
87129-MC3-700ZB	H11
87504-463-670	H7
87505-MG5-670	G11
87506-MA5-610	H7
87507-MG5-670	G11
87511-323-670	F12
87512-461-770	G11
87517-MG5-670ZA	F10
87523-102-720	E3
87560-MB0-670ZA	F10
88000	
88110-MC5-004	E4
88120-MC5-004	E4
89000	
89010-MG5-670	H9
89101-300-010	H9
89103-371-000	H9
89215-404-670	H9
89216-438-000	H9
89221-460-840	H9
89222-371-000	H9
89301-461-003	H9

© HONDA MOTOR CO., LTD. 1983

L 12

PART NO. INDEX

Part No.	Address No.
90000	
90011-MG5-670	B3
90013-425-003	C8
90013-425-700	G11
90017-425-000	B1
90017-438-670	H7
90018-425-000	B2
90019-425-000	B2
90020-438-000	C10
90021-469-000	B6
90022-425-000	B12
90023-425-000	B8
90024-425-000	C4
90026-MB0-000	B6
90028-425-000	C4
90031-438-003	C4
90032-438-003	C4
90037-422-003	C10
90038-425-000	B1
90042-393-000	C4
90043-438-670	C4
90052-MA3-000	B11
90055-MA3-000	C4
90061-MB0-000	E7
90101-MG5-670	E7
90104-MG5-670	G5
90105-KB7-000	E7
90105-MB0-000	F8
90105-ME2-000	F4
90105-438-000	F5
90106-438-000	F5
90108-223-000	G10
90109-422-670	G8
90113-438-000	E4
90114-MA5-671	E6
90116-MC7-003	E12
90116-283-010	E12
90117-426-000	G8
90121-438-610	G11
90124-392-000	F6
90125-410-000	G10
90131-MA7-000	E12
90145-KE8-000	E6
	F5
90145-MG5-670	E6
90147-147-671	H4
90150-MC5-003	E2
90151-438-670	G5
90154-MB7-610	H7
90155-MB7-610	H7
90157-438-670	H7
90162-MA3-660	H7
90166-MA3-660	H7
90166-MG5-670	E9
90167-SA0-980	E4
90167-422-000	E7
90168-MA3-660	G7
90176-422-000	G8
	H7
90180-MA3-006	F3
	F6
90180-MA3-660	F3
90185-MB7-610	F3
90185-371-000	E7
90201-415-000	B6
90202-438-000	B2
90202-469-000	B6
90208-425-870	G5
90208-438-000	H7
90210-438-000	H7
90231-200-010	B10
90301-428-900	E4
90301-473-003	G8
90302-425-830	E9
90304-GA6-003	H7
90304-ME1-670	G5
90304-425-000	E7
90305-KA4-003	F8
90305-333-000	F4
90309-315-000	H1
90309-375-003	F8
90309-428-731	H7
90313-329-000	E2
90321-422-000	E4
90324-MA1-000	F10
90354-425-830	G11
90360-422-000	E7
90380-MA6-000	H3
90432-MG5-670	B2
90432-425-000	C9
90441-425-000	B10
90441-706-000	B10
	B2
	B6
	C3
	C4
	E9
	C10
	B2
	C9
	C10
	B1
	B10
	C10
	C10
	C9
	B10
	G5
	C9
	C12
	F3
	F8
	F5
	E7
	E9
	H2
	H1
	G5
90443-379-690	B1
90451-422-000	B1
90452-323-000	C9
90453-426-000	C10
90454-425-000	B1
90455-333-010	B10
90457-425-000	C10
90459-438-000	C10
90475-425-000	C9
90481-292-000	B10
90481-430-000	G5
90483-700-000	C9
90486-028-000	C12
90501-MB7-610	F3
90501-MG5-670	F8
90501-310-000	F5
90503-425-000	E7
90506-425-830	E9
90512-300-000	H2
90521-292-000	H1
90531-438-670	G5
90541-425-000	B1
90543-273-000	E12
90544-283-000	E12
90545-300-000	E6
	F5
90556-044-000	G11
90557-438-000	G8
90563-304-000	B8
90600-MC7-611	E3
90600-425-830	G11
90601-393-000	C9
90601-422-000	C10
90602-MA3-300	B10
90602-MG5-670	E12
90651-MA5-671	E6
90659-170-000	B8
90701-425-000	B2
90705-639-000	B2
90731-425-000	C9
90753-MG5-670	F8
90841-001-000	H7
90854-SA0-680	G11
91000	
91004-MG5-671	C10
91005-425-003	C11
91007-438-003	C9
91008-374-003	C12
91010-MA3-003	B10
91015-425-831	E9
91015-425-832	E9
91016-371-000	E9
91022-438-008	C11
91101-516-000	B12
91201-425-003	C7
91202-444-005	B9
91204-425-003	C12
91205-425-003	C11
91208-422-003	B6
91212-422-006	F5
91252-MC7-003	F4
91253-442-003	F8
91254-463-003	F1
91256-425-003	B1
91256-425-005	C9
91257-425-013	F4
91258-410-006	F4
91258-410-013	F8
91258-438-711	E3
91301-027-000	B3
91301-200-000	F1
91301-469-003	F1
91302-MA3-661	F3
91302-MC7-611	C4
91302-001-020	D5
91302-028-000	H7
91302-377-000	C3
91302-377-000	C9
91304-287-000	E12
91306-329-000	F5
91306-425-003	G11
91306-634-000	E3
91307-425-003	G11
91308-MC7-003	C9
91309-MC7-003	B10
91309-425-003	E12
91310-MC7-003	B8
91311-425-000	B2
91313-393-003	C9
91316-425-003	F8
91352-MG5-671	H7
91352-425-003	G11
91353-MG5-671	C10
91356-MA3-661	C11
91410-679-000	C9
91456-371-770	C12
91492-425-000	B10
91901-MA6-000	E9
92000	
92000-05020-0A	E3
92000-06008	F1
92000-06012	B11
92000-06014	C9
92000-06016	C9
92000-06016-0A	C1
92200-06028	G8
92200-06045-0B	C12
92300-06012	G8
92700-08050-3B	G2
92700-08055-0E	F1
92716-12055-0E	B3
92800-14000	F8
93000	
93000-10032-0A	H1
93494-06016-08	E10
93495-06020-07	H4
93500-03008-1A	E2
93500-04006-0H	E3
93500-04006-1H	F12
93500-04010-1H	G1
93500-04012-0H	B8
93500-05008-0A	D5
93500-05020-0G	B7
93500-05025-0G	D4
93500-06010	C4
93500-06010-0G	D5
93500-06012-0H	C4
93500-06020-0G	D5
93500-06045	D5
93500-06070	C1
93600-04010-1B	D5
93600-04045-1G	F1
93600-06014	F1
93700-05020-0G	B12
93700-06025-0B	D5
93700-06040-0G	F1
93891-05012-07	B3
93891-05016-07	D4
93891-05030-07	B6
93891-05035-07	D4
93891-05050-07	C3
93892-04006-00	D5
93892-04010-00	F1
93892-04012-00	C11
93892-04016-00	D5
93892-05010-07	F1
93892-05012-00	F1
93892-05016-00	B8
93892-06010-00	H3
93892-06014-00	
93893-04012-18	
93893-06010-07	E3
93901-22110	F1
93901-24210	B11
93901-25020	C9
93901-25220	C9
93901-32320	C1
93901-34410	G8
93903-14380	C12
93903-14880	G8
93903-35110	G2
94000	F1
94001-06000	B3
94002-06000	F8
94002-08000-0S	C3
94011-08000-0S	H1
94021-06020	E10
94021-06070	H4
94030-08000	E2
94031-08000	E3
94031-10000	F12
94050-06000	G1
94050-08000	B8
94050-10000	G3
94101-04800	F1
94101-05800	E6
94101-06000	C12
94101-08000	E3
94101-10000	B11
94102-08200	E7
94103-06700	D2
94103-08200	D1
94103-08800	D2
94109-14000	D2
94111-04800	E5
94111-05000	F6
94111-06000	D1
94111-08000	D2
94201-16150	D3
94201-16220	F11
94201-20180	D1
94201-25250	E6
94201-30300	F5
94251-08000	G5
94301-08140	H4
94301-10160	H4
94301-12200	F11
94510-10000	G11
94510-17000	H3
94510-20000	E3
94510-30000	G3
94520-62000	G3
94601-17000	G3
95000	F1
95002-02070	G10
95002-02080	F5
95002-02120	F6
95002-02130	E3
95002-02650	H7
95002-80000	F1
95003-23036-10	G12
95003-23047-31	G12
95011-61000	E2
95014-61100	C12
95014-61200	E3
95014-71702	B11
95015-26200	E7
95700-06010-00	C4
95700-06010-07	C9
95700-06012-00	E4
95700-06012-07	E4
95700-06014-08	F1
95700-06016-00	F10
95700-06020-00	D2
95700-06020-07	D1
95700-06025-00	D2
95700-06025-07	D2
95700-06028-00	E5
95700-06032-00	F6
95700-06032-07	D3
95700-06035-00	F11
95700-06040-00	D1
95700-06045-00	E6
95700-06050-00	F5
95700-06060-00	G5
95700-06070-00	H4
95700-06080-00	H4
95700-06110-00	F11
95700-08016-00	G11
95700-08020-07	H3
95700-08022-00	E3
95700-08025-00	G3
95700-08025-07	G3
95700-08040-00	G3
95700-08060-00	F1
95725-06025-00	E2
96000	B8
96000-06012-00	G1
96000-06014-00	F11
96000-06020-02	H5
96000-06025-00	G1
96000-06025-07	E2
96000-06032-02	E9
96000-06032-02	F5
96000-06035-00	G4
96000-06035-07	H5
96000-06040-02	E2
96000-06055-02	E6
96000-06065-00	G2
96000-06070-02	G6
96100-60030	G10
96100-62040	C3
96140-63050-10	C3
96150-63020-10	C4
96150-63040-10	C4
96201-60000	C1
96211-05000	C1
96220-40118	C1
98000	C4
98069-58716	C4
98069-59726	C1
98069-60726	F5
98200-21500	C1
98200-53000	C4
99000	C4
99001-08120	B12
99001-10120	C4
99001-14170	C4
99002-13500	C4
99003-10000	B12
99003-30000	C4
99003-50000	C4
99006-12000	F11
99006-22000	G6
99006-27000	H2
99102-393-1220	H8
99103-MA4-0380	F10
	H2
	C5
	B10
	C12
	B12
	B11
	G7
	H8
	E5
	E6
	B9
	B11
	C1
	H8
	B3
	B3
	B3
	E8
	G1
	H9
	H9
	H9
	H9
	H9
	H9
	H9
	H9
	D2
	D2

© HONDA MOTOR CO., LTD. 1983