Certified to
NSF/ANSI/CAN 50
ANSI/APSP/ICC-16 2017

AQUASTAR® pool products

BLOCKABLE SUCTION OUTLET FITTING ASSEMBLY (SOFA) INSTALLATION, OPERATION, AND MAINTENANCE INSTRUCTIONS

FOR MODEL: 6HPHAxxx (xxx = COLOR SUFFIX)

MEETS OR EXCEEDS ANSI/APSP/ICC-16 2017

When installing and using this equipment, basic safety precautions shall always be followed, including the following:

IMPORTANT SAFETY INSTRUCTIONS
READ, FOLLOW, AND UNDERSTAND ALL INSTRUCTIONS AND WARNINGS

Any modification that increases the flow rate of the circulation system shall require re-evaluation of the cover/grate and sump to ensure that the flow rating of the Suction Outlet Fitting Assembly (SOFA) is not exceeded.

Missing, broken, or cracked cover/grates, sumps, mud-frames, or any other SOFA component shall be replaced before bathers are allowed to use the pool.

Loose cover/grates shall be reattached before bathers are allowed to use the pool.

SAVE THESE INSTRUCTIONS

INSTALLATION REQUIREMENTS AND LIMITATIONS

All SOFAs shall be installed in accordance with AquaStar's installation instructions.

No modification shall be made to a SOFA structure or flow path unless the new configuration has been certified to the original SOFA.

SOFA-configuration specific flow ratings are NOT to be exceeded at any time the pool is open to bathers.

The flow rating for pools with multiple, blockable SOFAs piped together in one body of water without isolation valves shall be determined by combining the flow rating of all SOFAs, minus the flow rating of one. If the flow ratings of all SOFAs are not equal, subtract the flow rating of the SOFA with the highest flow rating.

Cover/grates marked blockable installed in existing pools with single SOFA systems shall also be installed in conjunction with an additional device or system designed to prevent suction entrapment, where the additional device or systems is of a type listed in the section "*Single Outlet Blockable Drain Systems*" of these instructions.

Blockable SOFAs used for new pools and spas shall be installed in a multiple SOFA system only.

Select and install a SOFA, or combination of SOFAs, such that the resulting individual suction system flow rating is greater than the pumping system's maximum system flow rate.

Skimmers, gutters, and other overflow systems may not always be operational and could divert all the pump(s) flow through the SOFA suction system, therefore the flow capacity of these systems shall not be included when evaluating an individual suction system flow rating.

SOFAs shall not be located on seats or the backrests for seats.

When used in multiple-outlet systems, cover/grates marked Blockable shall be arranged such that the two outermost sumps/frames shall have a minimum separation of three feet, measured center-to-center. If they are to be installed closer than three feet center-to-center, they shall be located on two different planes, i.e., one SOFA shall be located on the pool floor, and one shall be located on a vertical wall, or each SOFA shall be located on two separate walls.

Pool finish should never exceed top of frame. Taper pool finish down and away from top (or lower) of frame. Top of grate should never be installed lower than the pool finish.

The use of adhesives or other attachment methods that prevent access to suction piping or SOFA components is prohibited.

Installation requires Phillips screwdriver. Hand tighten only. Start installation of screws by hand to ensure proper thread engagement and to prevent cross-threading. Use a hand-held Phillips screwdriver to hand tighten each screw until the screw and SOFA component fit snugly together. The parts and fasteners are snug when there are no visible gaps and they do not move when pulled or pushed by hand. DO NOT USE POWER TOOLS TO INSTALL FASTENERS.

Covers, when installed, shall not protrude more than 2 in. (51 mm) from the finished surface of the pool in which the SOFA is installed.

MAINTENANCE INSTRUCTIONS

FIELD AND CONFIGURATION MODIFICATION

Any field modification made to this product not authorized by AquaStar Pool Products shall void the VGBA-2017 certification.

No modification shall be made to a SOFA structure or flow path unless the new configuration has been certified as a new SOFA.

SERVICE LIFE

Replace cover assembly and fasteners within five years. Replace bulkhead adapter within thirty years or if damaged. If cover or SOFA components become brittle, show significant color change, or are damaged in any way, remove and replace as it is an indication that they have reached the end of their service life.

Cover and all other SOFA components shall be replaced at or before the end of their service life and that service life begins the month and year in which a SOFA component is installed with or without water.

WINTERIZING

Covers and supports may be removed to access suction piping — Save and store these OEM components in a safe location for reinstallation when not immediately reinstalled after winterizing. Lost or damaged components must be replaced with components sourced from AquaStar for the VGBA-2017 certification of this product to remain valid.

SERVICE INSTRUCTIONS

Service tool required: Phillips screwdriver *(hand-tools only)*.

Cover/grate, including fasteners, shall be observed for damage or tampering each operational day.

Missing, broken, or cracked cover/grates shall be replaced before bathers are allowed to use the pool.

Loose covers/grates and associated components shall be reattached before bathers are allowed to use the pool.

Bulkhead adapter, support components, and fastener receptacles shall be clean and free of debris or obstructions during installation of covers and fasteners.

Install drain covers in order of the assembly drawings provided in section "SOFA MODEL SPECIFIC FLOW RATES AND NSF ANSI/APSP/ICC 16-2017 CERTIFICATION DOCUMENTATION" of these instructions.

Start installation of screws by hand to ensure proper thread engagement and to prevent cross-threading, then continue to tighten using hand tools only. DO NOT USE POWER TOOLS TO INSTALL FASTENERS.

Hand-check cover/grate for snugness to the sump/frame after installation. Do not over-tighten screws.

Replace covers if components have become brittle, show significant color change, or are damaged in any way.

When any SOFA component is held in place by the interior finish of the pool, that surface shall be free of deterioration and voids.

If bulkhead adapter have become brittle, shows significant color change, is stripped, or damaged in any way, replace. If plastic anchors are stripped or damaged in any way, replace.

REPLACEMENT COVER FOR EXISTING POOLS

When installing covers on existing components ensure that the component is in good condition, and does not show signs of brittleness, significant color change, or damage in any way. If damaged replace the component.

EXISTING FASTENER SECURITY CHECK

When installing fasteners ensure that the screw hole is not loose (see Fig. 1), has damaged threads (see Fig. 2), is the wrong thread size (see Fig. 3), or does not align with the cover screw hole. For each location that appears to be reusable, test fastener security by partially installing screw in each location and then pulling firmly by hand. If the screw cannot be installed or pulls out, the component is to be considered damaged and should be replaced. Drilling holes into an existing component is not permitted.

When properly secured, the screw shall have at least 3 threads of engagement (see Fig 4). Use a hand-held Phillips screwdriver to hand tighten each screw until the screw and SOFA component fit snugly together. The parts and fasteners are snug when there are no visible gaps and they do not move when pulled or pushed by hand. DO NOT USE POWER TOOLS TO INSTALL FASTENERS.

FIGURE 1
IF SCREW HOLE IS LOSE

FIGURE 2
IF SCREW HOLE HAS DAMAGED THREADS

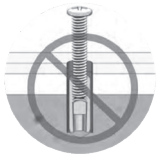

FIGURE 3
IF SCREW IS THE WRONG THREAD SIZE

FIGURE 4
ENSURE AT LEAST THREE THREADS OF ENGAGEMENT AND HAND CHECK TO ENSURE SCREW IS SECURE

SINGLE OUTLET BLOCKABLE DRAIN SYSTEMS

The flow rating for existing pools with a single, blockable SOFA is the flow rating of the SOFA, when also installed in conjunction with an additional device or system designed to prevent suction entrapment, where the additional device or systems is of a type listed in section "ADDITIONAL DEVICES OR SYSTEMS REQUIRED FOR SINGLE OUTLET BLOCKABLE DRAIN SYSTEMS" of these instructions. A single, blockable SOFA in a system that does not also include one of the additional devices or systems shall result in a flow rating of zero.

ADDITIONAL DEVICES OR SYSTEMS REQUIRED FOR SINGLE OUTLET BLOCKABLE DRAIN SYSTEMS *(LISTED BELOW)*

SAFETY VACUUM RELEASE SYSTEM - A system that ceases operation of the pump, reverses the circulation flow, or otherwise releases the vacuum in a circulation system when a blockage is detected, that has been tested by an independent third-party and found to conform to ASME/ANSI standard A112.19.17 or ASTM standard F2387.

SUCTION-LIMITING VENT SYSTEM - A circulation system that incorporates a tamper-resistant atmospheric vent that is hydraulically located between the suction outlet and the circulation pump, which allows air to enter the circulation system and release the vacuum within the system when the suction outlet is blocked and the circulation pump is operating.

GRAVITY DRAINAGE SYSTEM - A powered circulation system, which utilizes a collector tank hydraulically located between the pump and the suction outlet that is filled by the gravitationally induced flow of water from the suction outlet, and is vented to the atmosphere by a tamper-resistant opening.

AUTOMATIC PUMP SHUT-OFF SYSTEM - A system that is designed to sense blockage of the suction fitting and then turn-off the power to the pump, and subsequently release the vacuum in the circulation system when a blockage is detected.

DRAIN DISABLEMENT- A device or system that permanently stops the flow of water from a SOFA.

SPECIAL NOTES FOR COVER MODEL # 6HPHAXXX

ABS bulkhead adapter fittings that are not threaded must be securely attached to plumbing with proper glue. Use ABS to PVC transitional glues (such as Oatey® Weld-on® and other green NSF glues).

Pressurize system before installation.

DO NOT use clear, “hot”, “blue” or any fast set glues with any AquaStar pool products.

When retrofitting, extra secure installations can be obtained by applying wet and dry epoxy, silicone, etc., to underside of base plates.

After installation of bulkhead adapter fittings, if a gap exists between pool finish and base of cover it must be filled in with a two-part epoxy to avoid finger or other entrapment.

SOFA MODEL SPECIFIC FLOW RATES AND ANSI/APSP/ICC-16 2017 CERTIFICATION DOCUMENTATION

Please use the QR code or link listed below to look up the SOFA-Configuration specific flow rating of the cover that is to be installed. Please remember to cut and fill out the VGBA DRAIN COVER IDENTIFICATION INFORMATION document that is included in these instructions. Permanently post as near as feasible to the pump control and provide a copy of this information to the pool owner to be kept with other important pool-related documents.

6" Hockey Puck Sumpless Suction Outlet Cover FOR CONCRETE INSTALLATIONS

Cover Model #
6HPHAxxx

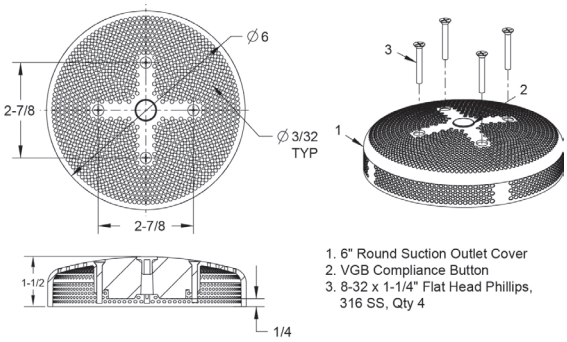

For SOFA Specific Flow Ratings Please scan QR code or visit www. aquastarpoolproducts.com/flowcode

SCAN ME

THIS SPACE IS INTENTIONALLY LEFT BLANK

A Safe Drain is No Accident™

AQUASTAR® pool products

ALIGNMENT AND ASSEMBLY ORDER OF SOFA COMPONENTS

Please follow the alignment and assembly order of the SOFA components illustrated below for the selected application.

6" Universal Bulkhead Adapter for 4HPxxx Replacement

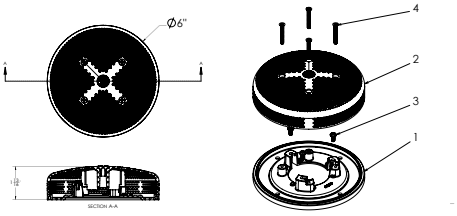

1. 4" Round Hockey Puck Adapter Plate *(Sold Seprately, Part #4HPAPxxx)*
2. 6" Round Hockey Puck Suction Outlet Cover
3. 8-32 x 3/8" LG. Pan Head Phillips, 316 SS, Qty 3 *(Sold Seprately, Part #4HPAPxxx)*
3. 8-32 x 1.25" Flat Head Phillips Flat Head Phillips Screw, 316 SS, Qty 4

Part #
4HPAPxxx

6" Bulkhead Adapter with 2½" Thread and 2" Socket for Fiberglass/Steel, with Gasket and 2½" Locking Nut

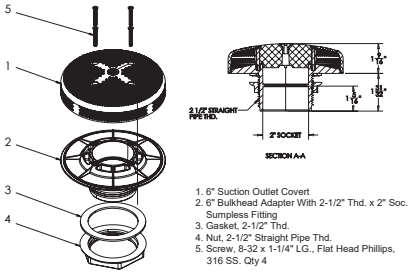

1. 6" Suction Outlet Covert
2. 6" Bulkhead Adapter With 2-1/2" Thd. x 2" Soc. Sumpless Fitting
3. Gasket, 2-1/2" Thd.
4. Nut, 2-1/2" Straight Pipe Thd.
5. Screw, 8-32 x 1-1/4" LG., Flat Head Phillips, 316 SS. Qty 4

Part #
6HA25T20Sxxx

6" Bulkhead Adapter with 1½" Threaded Sumpless Fitting

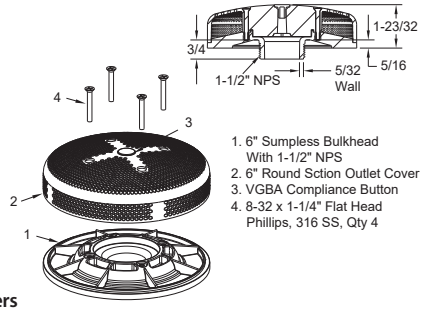

1. 6" Sumpless Bulkhead With 1-1/2" NPS
2. 6" Round Sction Outlet Cover
3. VGBA Compliance Button
4. 8-32 x 1-1/4" Flat Head Phillips, 316 SS, Qty 4

Part #
615Txxx
Fits 1022 female adapters

6" Bulkhead Adapter with 1½" Threaded Sumpless Fitting

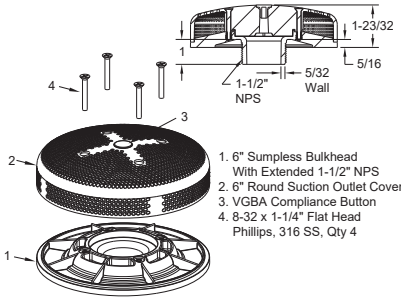

1. 6" Sumpless Bulkhead With Extended 1-1/2" NPS
2. 6" Round Suction Outlet Cover
3. VGBA Compliance Button
4. 8-32 x 1-1/4" Flat Head Phillips, 316 SS, Qty 4

Part #
6E15Txxx

Use with flush mount 1½" FPT, does not fit 1022 female adapters

6" Bulkhead Adapter with 1½" Slip-Insider Sumpless Fitting

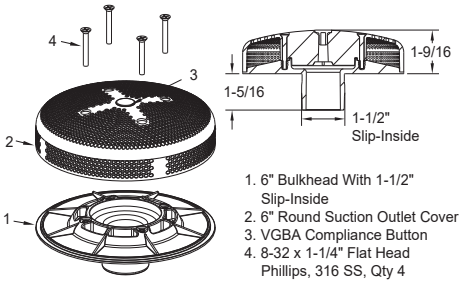

1. 6" Bulkhead With 1-1/2" Slip-Inside
2. 6" Round Suction Outlet Cover
3. VGBA Compliance Button
4. 8-32 x 1-1/4" Flat Head Phillips, 316 SS, Qty 4

Part #
615SIxxx

6" Bulkhead Adapter with 2" Slip-Insider Sumpless Fitting

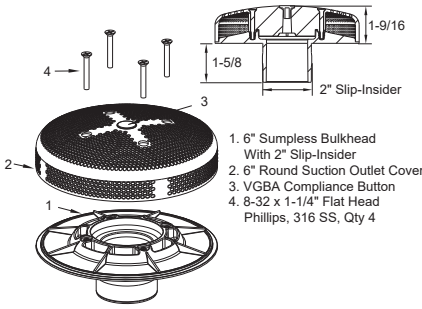

1. 6" Sumpless Bulkhead With 2" Slip-Insider
2. 6" Round Suction Outlet Cover
3. VGBA Compliance Button
4. 8-32 x 1-1/4" Flat Head Phillips, 316 SS, Qty 4

Part #
620SIxxx

Also available as 1½" slip Insider p/n 615SIxxx

6" Bulkhead Adapter with 2" Threaded x 1½" Socket Sumpless Fitting

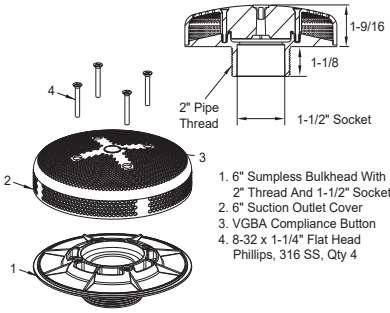

1. 6" Sumpless Bulkhead With 2" Thread And 1-1/2" Socket
2. 6" Suction Outlet Cover
3. VGBA Compliance Button
4. 8-32 x 1-1/4" Flat Head Phillips, 316 SS, Qty 4

Part #
620T15Sxxx

6" Bulkhead Adapter with 2" Socket Sumpless Fitting

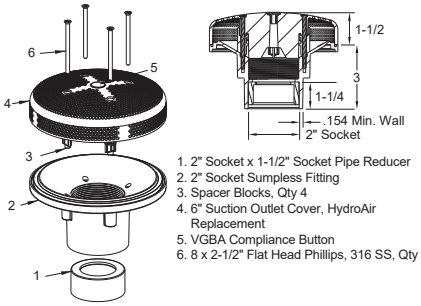

1. 2" Socket x 1-1/2" Socket Pipe Reducer
2. 2" Socket Sumpless Fitting
3. Spacer Blocks, Qty 4
4. 6" Suction Outlet Cover, HydroAir Replacement
5. VGBA Compliance Button
6. 8 x 2-1/2" Flat Head Phillips, 316 SS, Qty 4

Part #
RNDxxx

6" Bulkhead Adapter for Brass Anchor (BIK4) Installation

Requires 4HPAPxxx and BIK4 Kits

Part #
4HPAPxxx

Part #
BIK4xxx

OPTIONAL BRASS ANCHOR KIT

For anchoring cover
directly onto concrete finish.

Assembly is for use only with 4HPAPxxx and BIK4 Kits.

Seal perimeter of unblockable sump with epoxy or silicone. Ensure there are no gaps between the unblockable sump and pool floor. If a gap exists use additional epoxy or silicone until gap is closed.

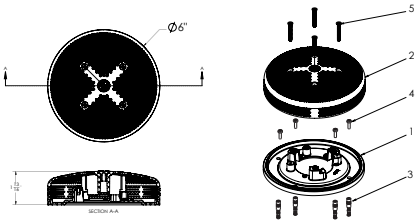

1. 4" Round Hockey Puck Adapter Plate *(Sold Seprately, Part #4HPAPxxx)*
2. 6" Round Hockey Puck Suction Outlet Cover
3. 10-32 Brass Anchor, Qty 4 *(Sold Seprately, Part #BIK4)*
4. 10-32 x 5/8" Pan Head Phillips, 316 ss, Qty 4 *(Sold Seprately, Part #BIK4)*
5. 8-32 x 1.25" Flat Head Phillips, 316 SS, Qty 4

⚠ WARNING! SUCTION ENTRAPMENT HAZARD

INCREASING PUMP SIZE WILL INCREASE FLOW. When in doubt, consult your pool and spa professional. NEVER use a pool or spa that has a missing or broken suction outlet cover. USING A POOL OR SPA WITH A MISSING OR BROKEN SUCTION OUTLET COVER CAN RESULT IN HAIR OR BODY ENTRAPMENT WHICH CAN CAUSE SEVERE BODILY INJURY OR DEATH. THE VACUUM IN SUCTION OUTLETS AND/OR SUCTION OUTLET COVERS WHICH ARE DAMAGED, BROKEN, CRACKED, MISSING, OR UNSECURED CAN CAUSE SEVERE INJURY AND/OR DEATH DUE TO THE FOLLOWING ENTRAPMENT HAZARDS: HAIR ENTRAPMENT – Hair can become entangled in suction outlet cover. LIMB ENTRAPMENT – A limb inserted into an opening of a suction outlet sump or suction outlet cover that is damaged, broken, cracked, missing or not securely attached can result in a mechanical bind or swelling of the limb. BODY SUCTION ENTRAPMENT – A negative pressure applied to a large portion of the body or limbs can result in an entrapment. EVISCERATION/DISEMBOWELMENT ENTRAPMENT – A negative pressure applied directly to the intestines through an unprotected suction outlet sump or suction outlet cover which is damaged, broken, cracked, missing, or unsecured can result in evisceration/disembowelment entrapment. MECHANICAL ENTRAPMENT – There is a potential for jewelry, swimsuit, hair decorations, finger, toe or knuckle to be caught in an opening of a suction outlet cover resulting in mechanical entrapment.
AFTER INSTALLATION OF FITTINGS, IF A GAP EXISTS BETWEEN POOL FINISH AND BASE OF COVER IT MUST BE FILLED IN TO AVOID FINGER OR OTHER ENTRAPMENT.

WARNING! – Failure to remove pressure test plugs and/or plugs used in winterization of the pool/spa from the suction outlets can result in an increased potential for suction entrapment as described above.
WARNING! – Failure to keep suction outlet components clear of debris, such as leaves, dirt, hair, paper and other material can result in an increased potential for suction entrapment as described above.
WARNING! – Suction outlet components have a finite life. The cover/grate should be inspected before each use of facility and replaced at least every five years or if found to be damaged, broken, cracked, missing, not securely attached or missing screws. **DO NOT** use facility until corrected!

⚠ WARNING! TO REDUCE THE RISK OF ENTRAPMENT HAZARDS

If not a VGBA-2017 Unblockable SOFA approved single unblockable outlet, a minimum of two functioning suction outlets per pump must be installed. Suction outlets in the same plane (i.e. floor or wall) must be installed a minimum of three feet (3 feet or 1 meter) apart, as measured from center point to center point. Dual suction fittings shall not be located on seating areas or on the backrest for such seating areas. If any suction outlets are located closer they shall be located on two different planes (i.e. one on the bottom and one on the vertical wall, or one each on two separate vertical walls). The maximum system flow rate shall not exceed the flow rating of the individual suction system. Never use pool or spa if any suction outlet component is damaged, broken, cracked, missing or not securely attached. Replace damaged, broken, cracked, missing or not securely attached suction outlet components immediately. In addition to two or more suction outlets per pump installed in accordance with latest APSP, Standards and CPSC guidelines, follow all applicable national, state and local code. Use gray medium set glue when attaching PVC pipe to Aquastar's PVC based sump buckets. Do not ever use blue glue or related hot glues, clear glues or any fast-setting cement.

As the manufacturer, AquaStar Pool Products, Inc., hereby certifies that their suction outlet fitting assemblies and drain covers manufactured on or after May 24, 2021 meet or exceed the requirements of ANSI/APSP/ICC-16 2017. Products manufactured before May 24, 2021 meet or exceed the requirements of the Virginia Graeme Baker Pool & Spa Safety Act, ASME/ANSI A112.19.8-2007, VGBA 2008 and ANSI/APSP 16-2011 standards and safety regulations as set forth by the Consumer Products Safety Commission. A copy of this certificate of compliance is available on AquaStar Pool Products Inc.'s website, www.aquastarpoolproducts.com.

A Safe Drain is No Accident™

AQUASTAR® pool products

VGBA DRAIN COVER IDENTIFICATION INFORMATION

ATTENTION INSTALLER - Please carefully cut along the dashed line and remove from instructions. Fill in the blank spaces below upon installing drain cover. Permanently post as near as feasible to the pump control and provide a copy of this information to the pool owner to be kept with other important pool-related documents.

Manufacturers Name:
AquaStar Pool Products Inc.

Cover/Grate Part Number:
Please check the box (☑) of the cover being installed:
☐ 6HPHAxxx

SOFA FLOW RATING
For SOFA flow rating please scan the QR code or visit www.aquastarpoolproducts.com/flowcode

Service Life of the Cover Grate:
5 years from the date of installation

Certified Suction Outlet Fitting Assembly (SOFA) Flow Ratings:
Please use the QR Code or Link to find the SOFA Specific flow rate for your configuration.

SOFA Model #: _____

Orientation: _____ *(wall or floor)* **SOFA Flow Rating:** _____ *GPM*

Location of the Installed Suction Outlet Fitting Assembly:
Please describe the location of the suction outlet fitting assembly.

Location: _____

Installation Date:
Please mark the month and year that the drain cover was installed below.

Month

1	2	3	4	5	6
7	8	9	10	11	12

Year

21	22	23	24	25	26
27	28	29	30	31	32

AQUASTAR® pool products

A Safe Drain is No Accident™

VGBA Compliance Every Pool, Every Time

IMPORTANT SAFETY INFORMATION
READ, FOLLOW, AND UNDERSTAND ALL INSTRUCTIONS AND WARNINGS

This VGBA Suction outlet has an installation specific flow rating and this product **SHALL NOT** be installed on a pumping system that is capable of exceeding this limit, which varies based on the number and location of installed suction outlets. **READ** and **FOLLOW** the section of the included installation instructions explaining how to calculate the suction system flow ratings and that of the installed pumping system.

WARNING! This is a Blockable VGBA Suction Outlet that must ONLY be installed in a multiple VGBA Suction Outlet system or be installed in a suction system that also includes one or more of the following devices or systems designed to prevent suction entrapment.

SAFETY VACUUM RELEASE SYSTEM - A system that ceases operation of the pump, reverses the circulation flow, or otherwise releases the vacuum in a circulation system when a blockage is detected, that has been tested by an independent third party and found to conform to ASME/ANSI standard A112.19.17 or ASTM standard F2387.

SUCTION-LIMITING VENT SYSTEM - A circulation system that incorporates a tamper-resistant atmospheric vent that is hydraulically located between the suction outlet and the circulation pump, which allows air to enter the circulation system and release the vacuum within the system when the suction outlet is blocked and the circulation pump is operating.

GRAVITY DRAINAGE SYSTEM - A powered circulation system, which utilizes a collector tank hydraulically located between the pump and the suction outlet that is filled by the gravitationally induced flow of water from the suction outlet, and is vented to the atmosphere by a tamper-resistant opening.

AUTOMATIC PUMP SHUT-OFF SYSTEM - A system that is designed to sense blockage of the suction fitting and then turn-off the power to the pump, and subsequently release the vacuum in the circulation system when a blockage is detected.

DRAIN DISABLEMENT- A device or system that permanently stops the flow of water from a SOFA.

THIS LABEL IS TO BE REMOVED BY THE INSTALLER ONLY

VGBA DRAIN COVER IDENTIFICATION INFORMATION

ATTENTION INSTALLER - Please carefully cut along the dashed line and remove from instructions. Fill in the blank spaces below upon installing drain cover. Permanently post as near as feasible to the pump control and provide a copy of this information to the pool owner to be kept with other important pool-related documents.

Manufacturers Name:
AquaStar Pool Products Inc.

Cover/Grate Part Number:
Please check the box (☑) of the cover being installed:
☐ 6HPHAxxx

SOFA FLOW RATING
For SOFA flow rating please scan the QR code or visit www.aquastarpoolproducts.com/flowcode

Service Life of the Cover Grate:
5 years from the date of installation

Certified Suction Outlet Fitting Assembly (SOFA) Flow Ratings:
Please use the QR Code or Link to find the SOFA Specific flow rate for your configuration.

SOFA Model #: _____

Orientation: _____ *(wall or floor)* **SOFA Flow Rating:** _____ *GPM*

Location of the Installed Suction Outlet Fitting Assembly:
Please describe the location of the suction outlet fitting assembly.

Location: _____

Installation Date:
Please mark the month and year that the drain cover was installed below.

Month

1	2	3	4	5	6
7	8	9	10	11	12

Year

21	22	23	24	25	26
27	28	29	30	31	32

AQUASTAR® pool products

A Safe Drain is No Accident™

VGBA Compliance Every Pool, Every Time

IMPORTANT SAFETY INFORMATION
READ, FOLLOW, AND UNDERSTAND ALL INSTRUCTIONS AND WARNINGS

This VGBA Suction outlet has an installation specific flow rating and this product **SHALL NOT** be installed on a pumping system that is capable of exceeding this limit, which varies based on the number and location of installed suction outlets. **READ** and **FOLLOW** the section of the included installation instructions explaining how to calculate the suction system flow ratings and that of the installed pumping system.

WARNING! This is a Blockable VGBA Suction Outlet that must ONLY be installed in a multiple VGBA Suction Outlet system or be installed in a suction system that also includes one or more of the following devices or systems designed to prevent suction entrapment.

SAFETY VACUUM RELEASE SYSTEM - A system that ceases operation of the pump, reverses the circulation flow, or otherwise releases the vacuum in a circulation system when a blockage is detected, that has been tested by an independent third party and found to conform to ASME/ANSI standard A112.19.17 or ASTM standard F2387.

SUCTION-LIMITING VENT SYSTEM - A circulation system that incorporates a tamper-resistant atmospheric vent that is hydraulically located between the suction outlet and the circulation pump, which allows air to enter the circulation system and release the vacuum within the system when the suction outlet is blocked and the circulation pump is operating.

GRAVITY DRAINAGE SYSTEM - A powered circulation system, which utilizes a collector tank hydraulically located between the pump and the suction outlet that is filled by the gravitationally induced flow of water from the suction outlet, and is vented to the atmosphere by a tamper-resistant opening.

AUTOMATIC PUMP SHUT-OFF SYSTEM - A system that is designed to sense blockage of the suction fitting and then turn-off the power to the pump, and subsequently release the vacuum in the circulation system when a blockage is detected.

DRAIN DISABLEMENT- A device or system that permanently stops the flow of water from a SOFA.

THIS LABEL IS TO BE REMOVED BY THE INSTALLER ONLY

REFER TO INSTRUCTIONS OR VISIT OUR WEBSITE FOR ADDITIONAL INFORMATION - (877) 768-2717 - www.aquastarpoolproducts.com - MADE IN THE USA - © 2023 AquaStar Pool Products, Inc. - REV042423